simplify®
CLIMATE SOLUTIONS

Original instructions

SIMPLIFY MONITORING AND CONTROL SYSTEM

| en |

055068
Rev. 1.2 · 2023-W51

DANTHERMGROUP

en

Table of contents

Introduction **4**
Overview 4
Data protection 5
Symbols used in the operating instructions 5

Product description **6**
General description 6
System components 7

Transport and storage **9**
Transport 9
Storage 9

Installation **10**
General requirements 10
Finding the QR code 11
Product registration 13
Positioning and setting up products 15
Expansion and replacement of products during ongoing operation 16

Operation **20**
Overview 20
Installation view 21
Chart view 23
Product display of the chart view 27
Alarms 32
Management 34
Troubleshooting 36

Complete the project **39**
Archiving 39
Collecting the products 40

Disposal **41**
General notes 41
Disassembly 41

Annex **42**
Technical data 42
Dimensions 45
Declaration of conformity (EU) 49
Declaration of conformity (UKCA) 50

Introduction

Overview

Manual

This is the manual for the Simplify Climate Solutions monitoring solution.

The part number of these operating instructions is 055068.

Product designation

The Simplify Climate Solutions system uses the free-of-charge Simplify App as well as various products available for order.

Article number	Product
380030	Simplify Control Unit
380031	Simplify Control Unit UK
380032	Simplify Relay Box
380033	Simplify Relay Box UK
380034	Simplify Sensor Box
380035	Simplify Sensor Probe - RH/TEMP, 24 cm
380036	Simplify Sensor Probe - RH/TEMP, 300 cm
380037	Simplify Sensor Probe - RH/TEMP, 2000 cm
380038	Simplify Integration Box
380039	Simplify Sensor Probe - Resistive, 24 cm
380040	Simplify Sensor Probe - IAQ, 24 cm
380042	Simplify Suitcase
2000268	Simplify CC 4 Box

Foreseeable misuse

Any operation other than as described in this manual is prohibited. Non-observance renders all claims for liability and guarantee null and void.

If any unauthorised modifications are made, any claims for liability and guarantee are rendered null and void.

User groups

User groups for these operating instructions are:

- Operators using the product as intended.
- Qualified personnel (e.g. installers, service technicians) who properly install and maintain the product.

Installation and repair of the units is to be carried out by qualified personnel only. It is the responsibility of the installer to read and understand this manual prior to initial start-up and setup of the units. The warranty is limited to units that have been installed by trained personnel.

Apart from the external cleaning of the units, all maintenance tasks must be carried out by trained personnel.

This product is not intended for use by persons (including children) with reduced physical, sensory or mental capabilities, unless they have been given supervision or instructions concerning the use of the appliance by a person responsible for their safety. Children should be supervised to ensure that they do not play with the product.

Copyright

No part of this manual may be reproduced without the prior written permission of Dantherm.

Recycling

The units are designed to provide a long service life. At the end of their service life, the units must be recycled in accordance with national regulations and with high environmental protection considerations.

en

Reservations

Dantherm reserves the right to make changes and improvements to the product and the manual at any time without any obligation to give prior notice.

Quality Management System

Dantherm has implemented a quality management system in accordance with EN/ISO9001. The system is supplemented with an environmental management system in accordance with EN/ISO14001.

Data protection

In order for you to use the product, Dantherm requires your consent to collect and process personal data in accordance with the General Data Protection Regulation. We have a document ready for you to sign for consent. The document contains details of the information we collect, the purpose for which it is collected and third parties who have access to that information.

Symbols used in the operating instructions

In these operating instructions, particularly important text passages are highlighted with signal words and symbols that are described below.

Signal words

⚠ DANGER

...indicates a hazard which, if not avoided, will result in death or serious injury.

⚠ WARNING

...indicates a hazard which, if not avoided, could result in death or serious injury.

⚠ CAUTION

...indicates a hazard which, if not avoided, could result in a minor or moderate injury.

NOTICE

...indicates important information (e.g. property damage) but does not indicate hazards.

INFO

Information marked with this symbol helps you to carry out your tasks quickly and safely.

Hazard symbols

Electrical voltage
This symbol indicates that there are dangers to the life and health of persons due to electrical voltage when handling the system.

Disconnect the power plug
This symbol indicates that you must disconnect the power plug from the socket before carrying out certain tasks.

Product description

General description

Introduction

Simplify Climate Solutions from Dantherm Group is a cloud-based sensor solution for remote control, monitoring and analysis of climate management processes. This system gives you the fully transparent feedback you need to optimise your installations for climate control.

As a business management tool, Simplify is suitable for various industries, but especially for water damage restoration companies and their insurance partners, as well as construction companies, pest controllers and many more.

Simplify reduces the number of on-site visits, allows critical data to be accessed remotely and helps optimise your daily operations. Simplify allows data from wireless sensors to be collected on-site and made available in the cloud via the Simplify Dashboard. The system has a simple and intuitive user interface, making it easy to use for all staff.

Monitoring allows you to track not only the performance of the process itself, but also the performance of your equipment. You receive real-time information on power consumption and machine status from the convenience of your office.

Simply put, this monitoring solution uses wireless sensors on dwellings and equipment to monitor the drying, heating or cooling process during your air conditioning project, for example in construction or water damage restoration. This way Simplify allows you to check the dehumidification, heating or cooling status of active jobs from almost any device and from anywhere. You can also remotely monitor and control parameters such as on/off, alarms, temperature, relative humidity, resistance measurement, power consumption and room air quality. In consequence, using this remote monitoring in an air conditioning process eliminates or reduces costs associated with managing a job or project and your equipment.

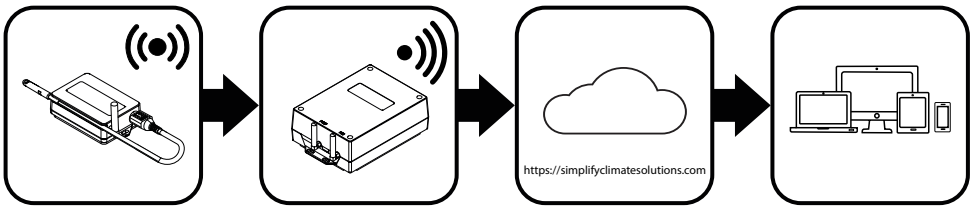

Fig. 1: Functional principle Simplify Climate Solutions

Product features

Simplify products measure data and transmit it to the Simplify Control Unit via radio frequency 868 MHz. The Simplify Control Unit transmits the data to the cloud via GSM.

If the 230 V power supply fails, the backup battery of the Simplify Control Unit is activated. It can maintain normal operation for 12 to 15 hours. The backup battery is charged automatically as soon as the mains voltage is working again.

It is possible to connect several different Simplify products to a Simplify Control Unit. To ensure optimum user friendliness, a maximum of 50 Simplify Sensor Boxes should be connected.

Simplify Climate Solutions features an alarm function which, as required, informs the user about any deviations from the limit values.

Simplify Climate Solutions can be used in combination with Dantherm CDT MKII and MKIII condensing dehumidifier with an integrated Simplify Integration Box.

en

System components

The Simplify system includes several products:

Simplify Control Unit	Control unit for the control and radio connection of Simplify products.
Simplify Sensor Box	Product for connecting a Simplify Sensor Probe variant and for radio connection with the Simplify Control Unit.
Simplify Sensor Probe – IAQ	Cable with sensor probe for air quality (TVOC [µg/m^3], eCO2 [ppm]). Available in 24 cm length.
Simplify Sensor Probe – Resistive	Cable with sensor probe for water content in materials (WME [%], MC [ohm]). Available in 24 cm length.
Simplify Sensor Probe – RH/TEMP	Cable with sensor probe for temperature [°C] and relative humidity [%]. Available in 24 cm, 300 cm and 2000 cm length.
Simplify Relay Box	Relay with 3 sockets and on/off functionality. Available with different plug types for 184-265 V AC, tested in accordance with the Measuring Instruments Directive MID.
Simplify Integration Box	Product for integration of a mobile Dantherm CDT MKII and MKIII condensing dehumidifier.
Simplify CC 4 Box	Relay with 4 sockets and on/off functionality. Can be locked. Tested in accordance with the Measuring Instruments Directive MID. Available with different plug types for 184-265 V AC. More information: sales.de@danthermgroup.com
Simplify App	Smartphone application used for scanning Simplify products and registration of the system. Supports iOS and Android.
Simplify Dashboard	Online platform for presentation of data and generation of reports as well as remote control of some Simplify products.

Checking the delivery

Check the Simplify products for transport damage during initial unpacking:

1. Report obvious, external damages to the carrier, packaging company, post office, etc. immediately upon receipt and note the damage in the consignment or transport documents.
2. Remove the packaging completely (without using a knife) and dispose of the packaging material according to the local regulations.
3. Check the content of the box.
4. If you notice any transport damage after unpacking the Simplify products or if the delivery is incomplete, contact the responsible sales representative or specialist dealer immediately.

Unpacking the products

The contents of the case may vary. The main Simplify products are depicted below. Check the case and Simplify products for proper condition before every use.

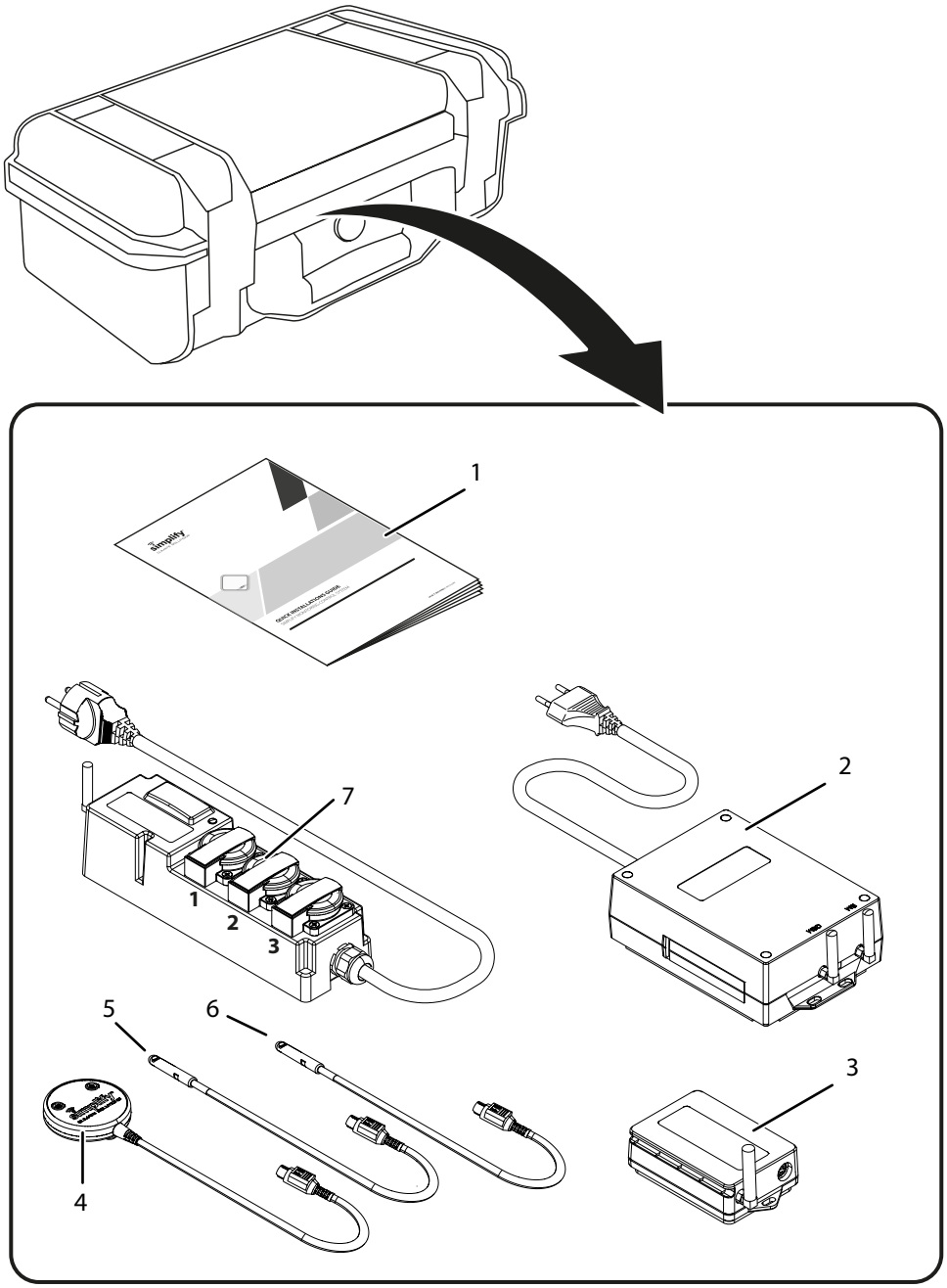

Fig. 2: Scope of delivery

1 Operating instructions
2 Simplify Control Unit
3 Simplify Sensor Box
4 Simplify Sensor Probe – Resistive
5 Simplify Sensor Probe – RH/TEMP
6 Simplify Sensor Probe – IAQ
7 Simplify Relay Box

en

Transport and storage

Transport

The lithium batteries contained are subject to the requirements of the dangerous goods regulations (class 9 dangerous goods, lithium content > 1.0 g, < 5.0 g). When shipping via third parties (e.g. air transport or freight forwarding), special requirements for packaging and marking must be observed. In this case, a dangerous goods expert must be consulted when preparing the package for shipping.

Product	Batteries contained
Control unit	1 × 3.7 V lithium-ion battery 1 × CR2032 lithium button cell battery.
Sensor box	1 × 9 V metal lithium battery. ≥ 1200 mAh (for a service life of at least 5 years)

Storage

For optimal storage, keep the products in the case and observe the storage temperature in the technical data.

Installation

General requirements

The system is programmed with the Simplify App for smartphones or tablets. The Simplify App is available for Android from version 9.0 and for iOS from version iOS15 onwards.

When setting up the Simplify Control Unit and the different Simplify products, ensure an unimpeded radio connection between the products. Obstacles like walls or objects may reduce the capacity.

INFO

Before first use or after prolonged storage (≥ 6 months)

When putting the Simplify Control Unit into operation for the first time or after a longer storage period (≥ 6 months):

- We recommend installing the unit and any Simplify Sensor Box with Simplify Sensor Probe – RH/TEMP overnight so that the software of all products is updated via the Simplify Cloud. This corresponds to approximately 6 Simplify Sensor Boxes Simplify Control Unit in one night.
- Fully charge the Simplify Control Unit for 4 hours.

If you notice that the Simplify Control Unit has a damaged battery, send the Simplify Control Unit to Dantherm A/S for battery replacement.

The battery provided with the Simplify Sensor Box is not rechargeable and must be replaced once discharged. The battery life depends on the type of sensor probe in default data sampling mode. To provide for a service life of +5 years, use a 9 V metal lithium battery with at least 1200 mAh. For replacement of the battery in the Simplify Sensor Box, please refer to the video under:
https://www.youtube.com/watch?v=3drKseAWyKs

NOTICE

The product warranty is voided if a battery in the Simplify Control Unit is replaced by anyone other than Dantherm A/S.

en

Finding the QR code

Every unit is provided with an external, clearly visible QR code for identification via the Simplify App. If the QR code that is printed outside the unit is no longer readable, you can create and affix a new QR code.

1. The QR code number can be found inside the unit, see below.
2. Obtain a free-of-charge QR generator on the internet, e.g. http://www.barcode-generator.org/
3. Generate a QR code on the basis of the QR code number.
4. Print the QR code onto a label and affix it. We recommend using the label with the number 3421 or 18033 from AVERY.

NOTICE

The new QR code must comply with the number in the unit.

The system will not work if the number is wrong.

⚠ DANGER

Risk of electric shock!

You can be severely injured by an electric shock.

- Disconnect units with mains plugs from the mains by removing the mains plug from the socket before opening the unit!

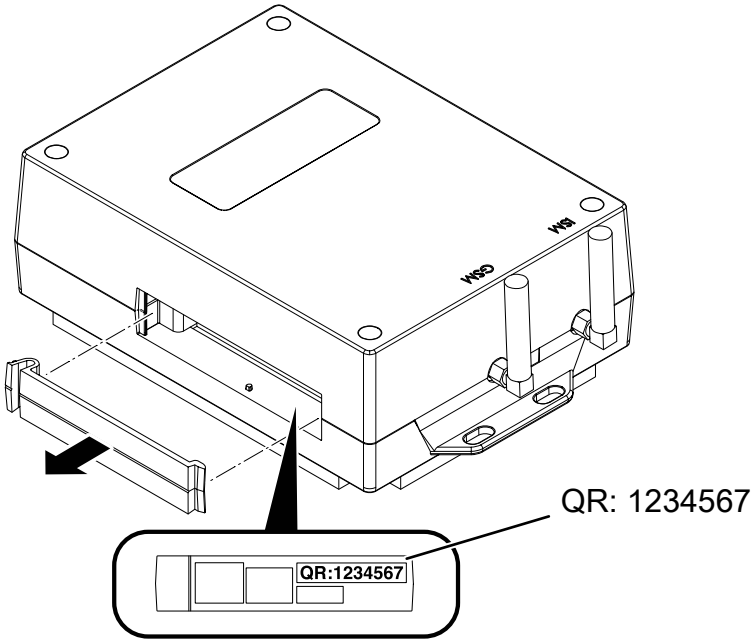

Fig. 3: QR code number in the Simplify Control Unit

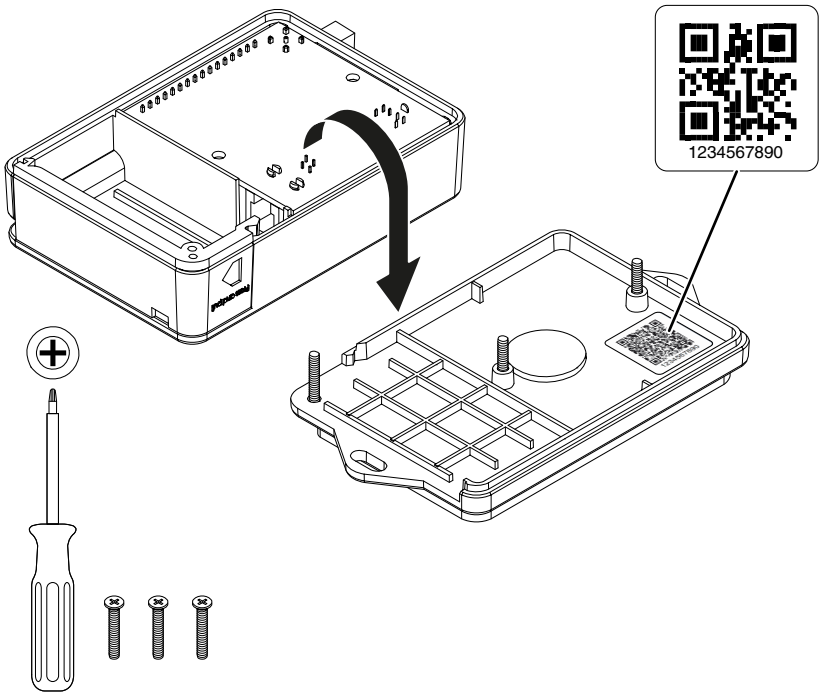

Fig. 4: QR code number in the Simplify Sensor Box/Simplify Integration Box

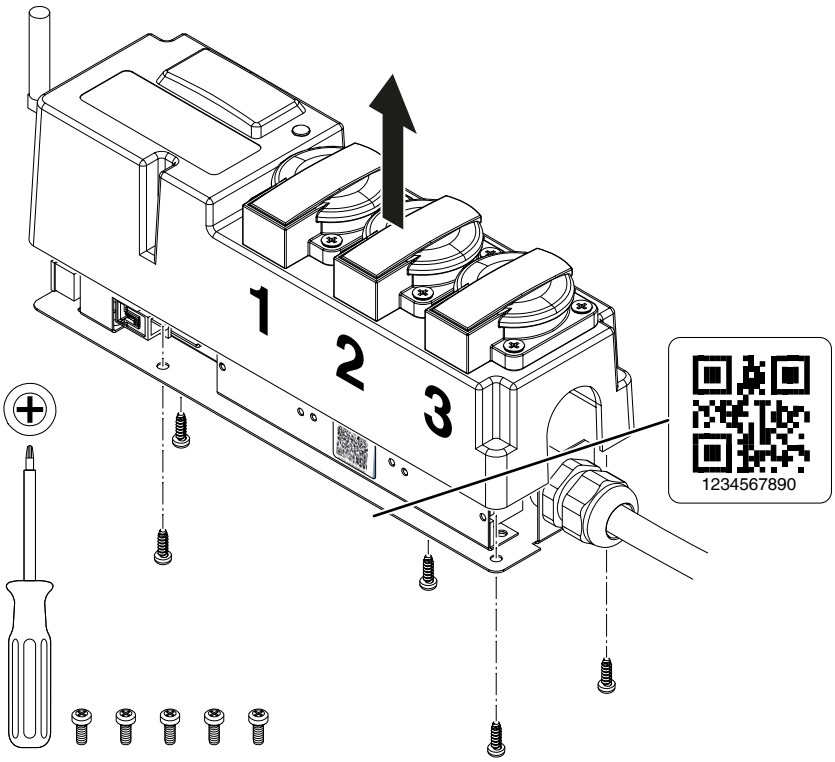

Fig. 5: QR code number in the Simplify Relay Box

en

Product registration

1. Go to Google Play or to the App Store, search for the Simplify App "Simplify Climate Solutions" and download it.
2. Start the Simplify App and log in with your user details.

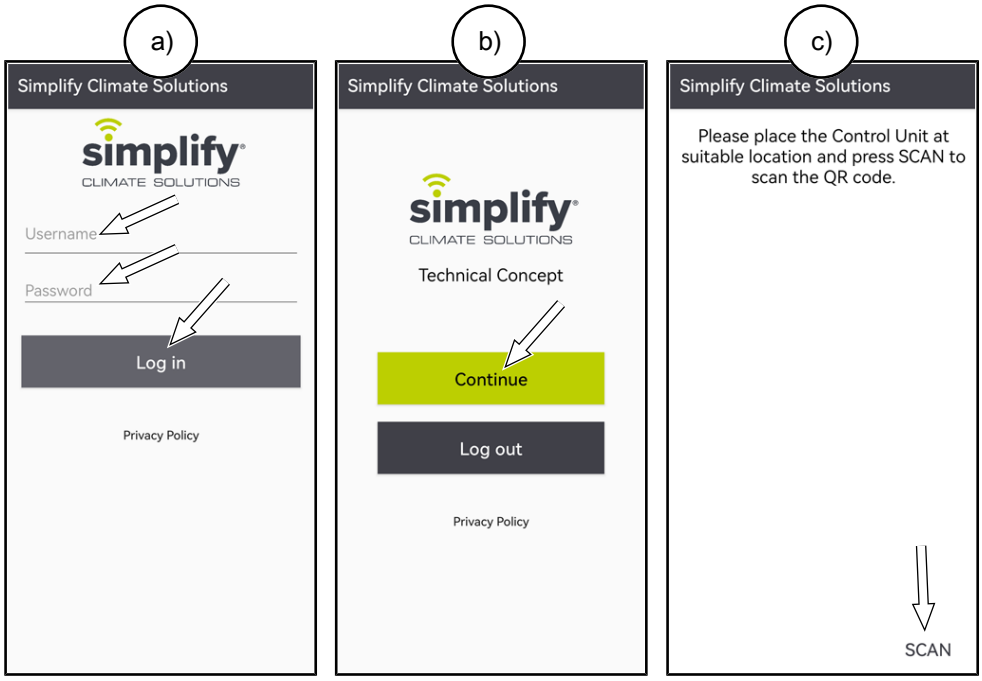

Fig. 6: Logging in to the Simplify App

3. Press Continue and then SCAN.
4. Point the camera to the QR code on the Simplify Control Unit.
   ⇨ "ID" and "Name" are shown.

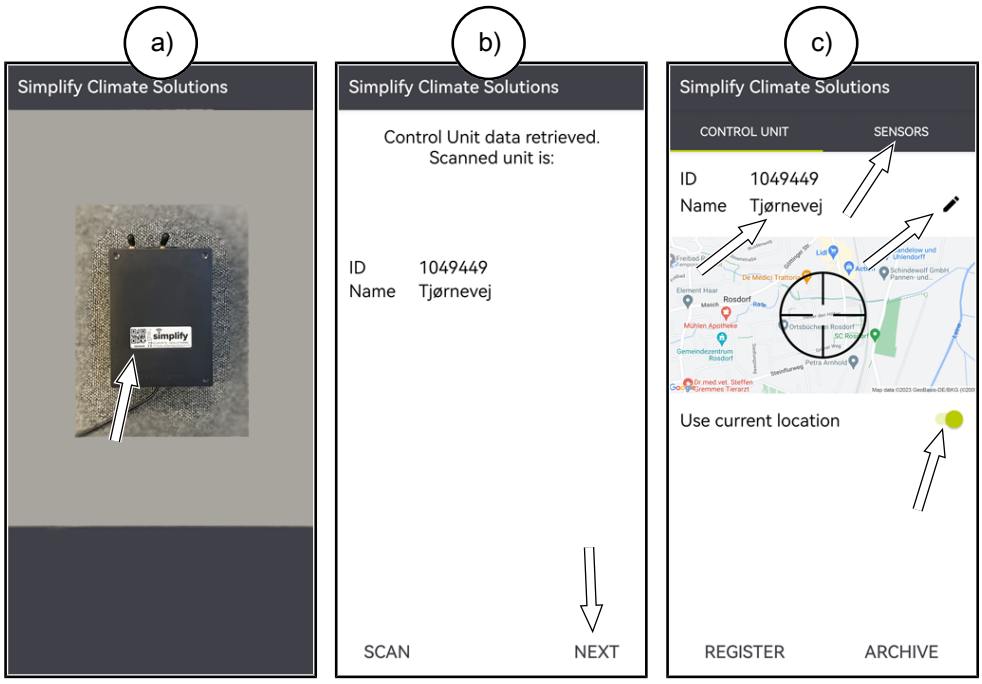

Fig. 7: Scanning the code on the Simplify control box

5. Press "Next".

INFO

If a previous project has not been archived in the Simplify App, the previous name is displayed instead of "Archived".

- To store the previous project, press "ARCHIVE".

6. Highlight the line "Name" or, if available, press the pencil.
7. Name the Simplify Control Unit so that the results can be clearly assigned to this project later. Observe that a name may only contain a maximum of 30 characters.

INFO

The functionality of Simplify can only be used to a limited extent without activated location transmission.

- Activate location transmission using the button below the map.

8. Open the "SENSORS" tab. Press "ADD" or "+" to add further Simplify Sensor Boxes and Simplify Relay Boxes. Scan and name each Simplify Relay Box and each Simplify Sensor Box.

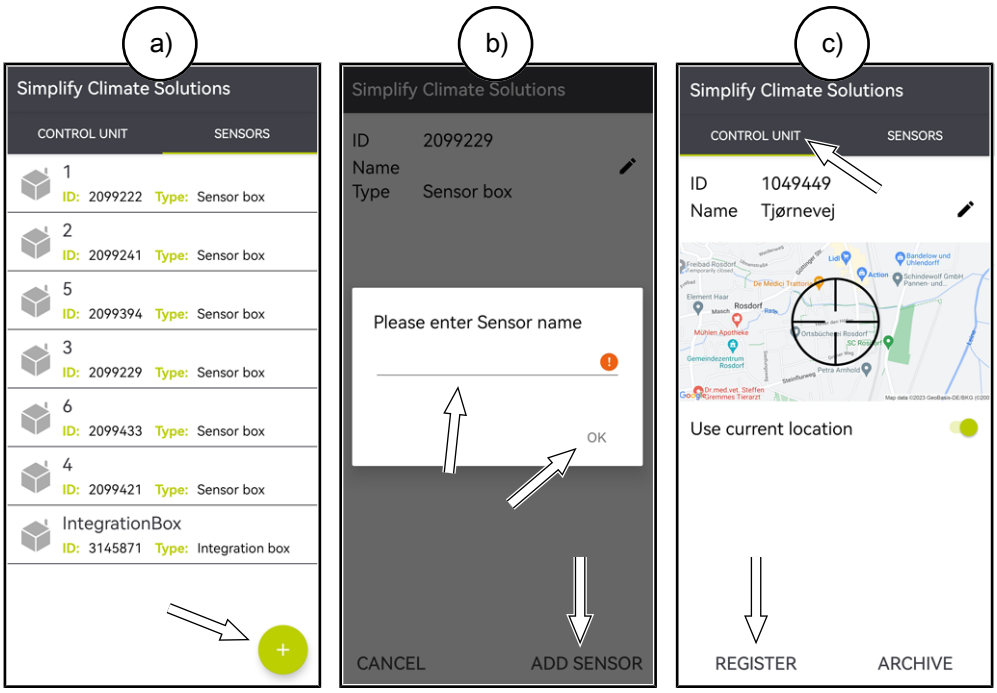

Fig. 8: Adding Simplify products

9. Connect other accessories if available (e.g. Dantherm CDT MKII and MKIII condensing dehumidifier with Simplify Integration Box) and connect them to the Simplify Control Unit
10. Press "CONTROL UNIT" and then "REGISTER" to start the registration.
    ⇨ You have 12 hours to complete the registration. After that, the GSM connection will be disconnected.

To attempt the registration again after the expiration of 12 hours:

1. Unplug the Simplify Control Unit.
2. Wait until all LEDs are switched off.
3. Carry out the registration process.
4. Switch the Simplify Control Unit on again once registration is complete.

en

Positioning and setting up products

INFO

Align the unit aerials vertically or at least so that they are standing in the same position and select a position for the units that is as high as possible in order to attain the optimum range. Ensure that the devices are tightly tensioned.

1. Position the Simplify Control Unit, e.g. using the magnets on the back.
2. Connect the Simplify Control Unit to a socket outlet and wait until the LED is flashing green.
   - ⇨ LED flashing orange: Simplify Control Unit searching for Ethernet or GSM signal
   - ⇨ LED lights up orange: Simplify Control Unit connected
   - ⇨ LED flashing green: Simplify Control Unit is ready for connecting the products
   - ⇨ LED lights up green: All scanned products are connected
3. Connect each Simplify Relay Box to a properly earthed socket outlet and monitor the connection to the Simplify Control Unit.
   - ⇨ 1 beep: Simplify Relay Box switched on
   - ⇨ 3 beeps: Simplify Relay Box connected with Simplify Control Unit
4. Connect the equipment to each Simplify Relay Box.
5. Position all Simplify Sensor Boxes in succession.
6. Pull back the handle part of the plug on the Simplify Sensor Probe and connect the Simplify Sensor Probe to the corresponding Simplify Sensor Box.
   - ⇨ The Simplify Sensor Box switches on.

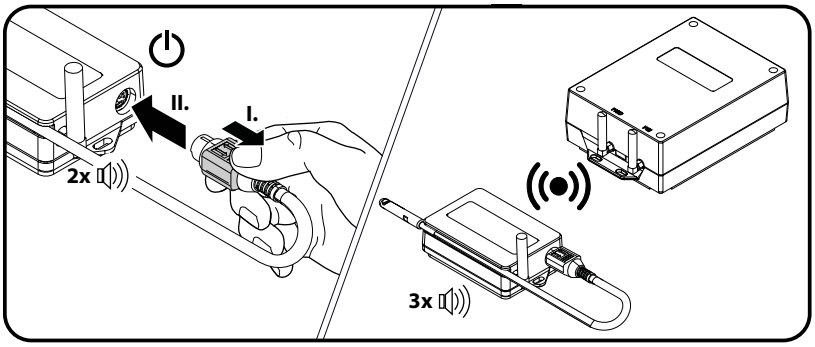

Fig. 9: Switch on and connect the Simplify Sensor Box

   - ⇨ 2 beeps: Simplify Sensor Box switched on and Simplify Sensor Probe is working
   - ⇨ 3 beeps: Simplify Sensor Box connected
   - ⇨ 1 beep: battery is working, but defective Simplify Sensor Probe
   - ⇨ No beep: Battery empty or missing
7. Connect other accessories if available (e.g. Dantherm CDT MKII and MKIII condensing dehumidifier with Simplify Integration Box) and connect them to the Simplify Control Unit.
8. Using the link below, check if all products are active in the Simplify Dashboard and are measuring correctly.
   - ⇨ https://simplifyclimatesolutions.com

INFO

It may take up to 10 minutes until products are displayed as active in the Simplify Dashboard ("ACTIVE"). The first 10 data packages are transmitted at an interval of one minute, the subsequent transmission intervals are adjustable.

Expansion and replacement of products during ongoing operation

Replacing the Simplify Sensor Probe

Follow the steps below to replace a Simplify Sensor Probe:

1. Remove the Simplify Sensor Probe from the Simplify Sensor Box.
2. Wait for approx. 60 seconds.
3. Insert the new Simplify Sensor Probe into the Simplify Sensor Box.
   - ⇨ 2 beeps: Battery and sensor are functional.
   - ⇨ 3 beeps: Connection to the Simplify Control Unit has been established.

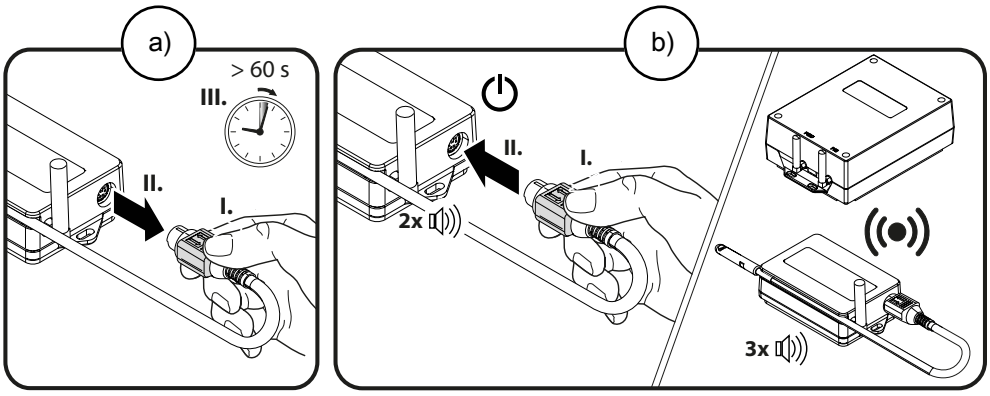

Fig. 10: Replacing the Simplify Sensor Probe

⇨ The Simplify Sensor Box in the Simplify Dashboard is shown as "ACTIVE" when the Simplify Control Unit uploads data to the Simplify Dashboard the next time.

INFO

If a Simplify Sensor Probe is replaced by another type of sensor probe i.e. from a RH/TEMP type sensor probe to a Resistive type, the Simplify Dashboard saves the data from the previous type in a passive box in the dashboard and creates a new active box for a new active product display.

Opening a project in the Simplify App

In order to add or remove a product, the ongoing project must be opened in the Simplify App.

1. Scan the QR code on the Simplify Control Unit and the Simplify Sensor Box.
2. Press "Next".
3. Select the "SENSORS" tab.

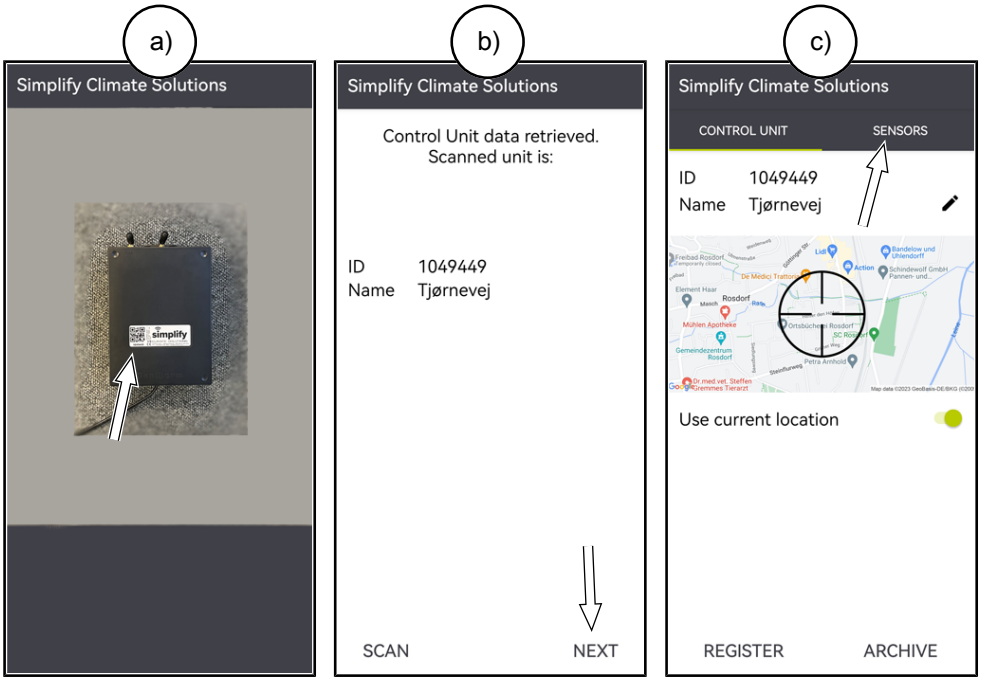

Fig. 11: Opening Simplify Control Unit in the Simplify App

Adding products

Please proceed as follows to add a Simplify product to an ongoing project:

1. Open the project in the Simplify App.
2. Press "ADD" or "+".
3. Scan the QR code of the Simplify product to be added to the project.
4. Name the Simplify product and confirm with "Save" or "ADD SENSOR".
5. Select the "CONTROL UNIT" tab.
6. Press "REGISTER".

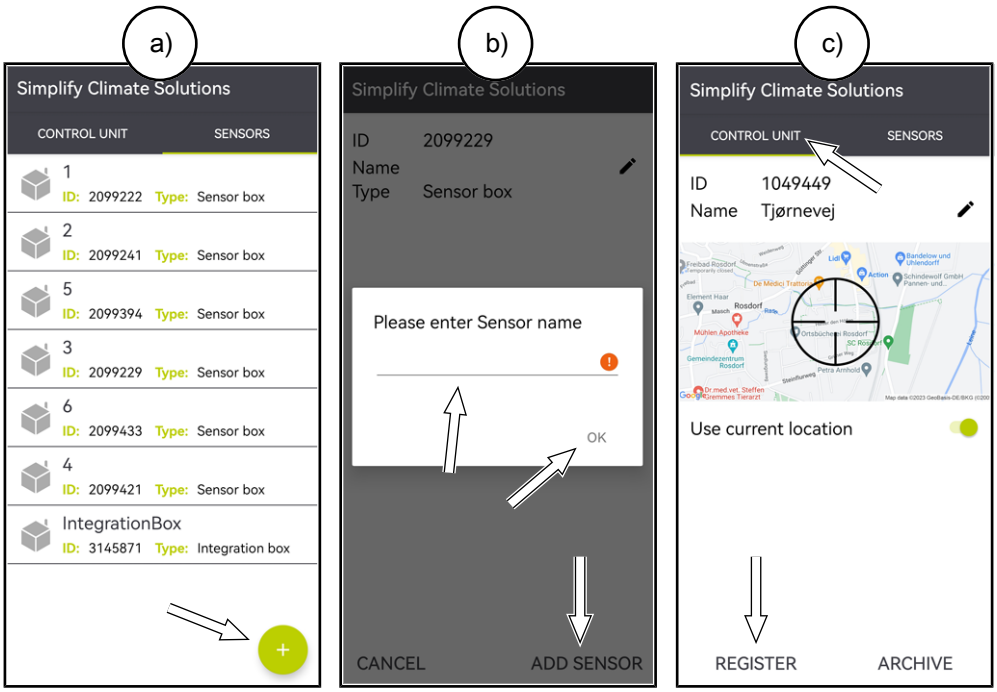

Fig. 12: Adding a product to an ongoing project

7. Switch on the Simplify product. A Simplify Sensor Box is switched on by inserting the Simplify Sensor Probe. A Simplify Relay Box or Simplify Integration Box is switched on via the power connection.
   - ⇨ The Simplify product is automatically connected after 3 beeps.
   - ⇨ A connected Simplify Sensor Box is shown as "ACTIVE" in the Simplify Dashboard when the Simplify Control Unit uploads data to the Simplify Dashboard the next time.
   - ⇨ A connected Simplify Relay Box or Simplify Integration Box is immediately shown as "ACTIVE".

Removing products

Please proceed as follows to remove a product from an ongoing project:

1. Open the project in the Simplify App.
2. Press and hold the line of the product until a selection box appears.
3. Press "DELETE".
4. Select the "CONTROL UNIT" tab.
5. Press "REGISTER".

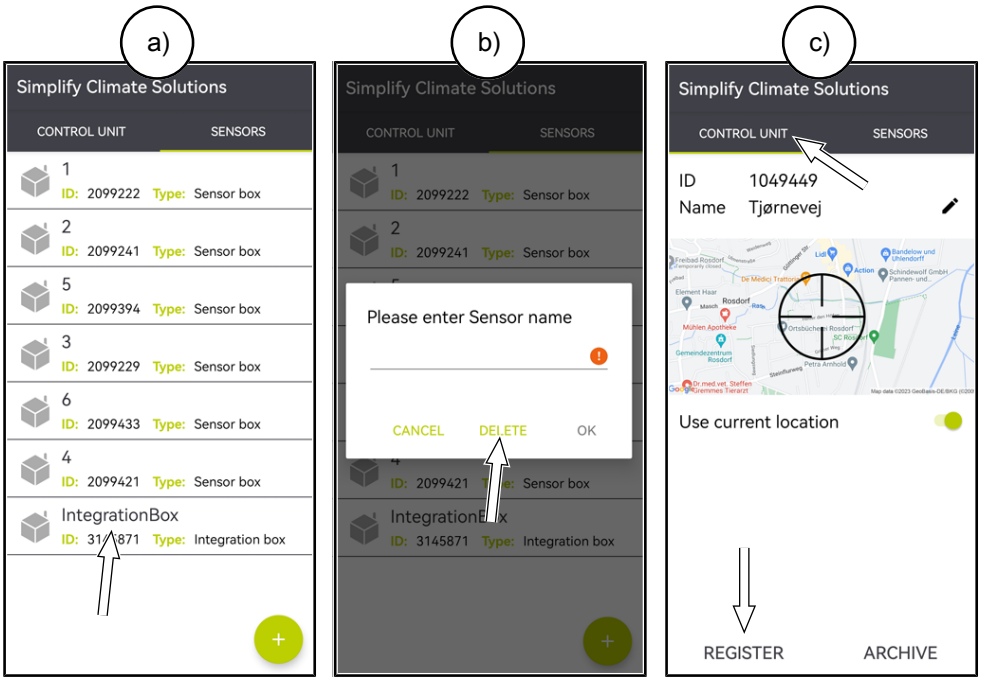

Fig. 13: Removing a product from an ongoing project

6. After you have removed a Simplify Sensor Box, disconnect the Simplify Sensor Probe.

INFO

A removed product is no longer visible in the ongoing project. After archiving, the removed products are displayed in the archive.

Operation

Overview

Simplify Dashboard

The Simplify Dashboard is your online interface for viewing the data from the Simplify products. All linked installations (projects) with ongoing and archived measurements can be viewed here. You can monitor data online, program alarms, switch units on/off and export data for the purpose of analysis. After you have received access, you can register at the following address:
https://simplifyclimatesolutions.com

The Simplify Dashboard supports most modern browsers (e.g. Chrome, Edge, Firefox, Safari). The view suitable for tablets and smartphones.

Fig. 14: Simplify Dashboard

The Simplify Dashboard receives the data collected by the Simplify Control Unit. Each Simplify product transmits one data package per minute after the connection has been established for the first time. After 10 minutes, the transmission interval depends on the settings in the Simplify Dashboard. After every data transmission process, the Simplify product goes to standby.

Software updates from the Simplify cloud

If the Simplify system is online, it automatically sends requests for software updates to the Simplify cloud every night.

en

Installation view

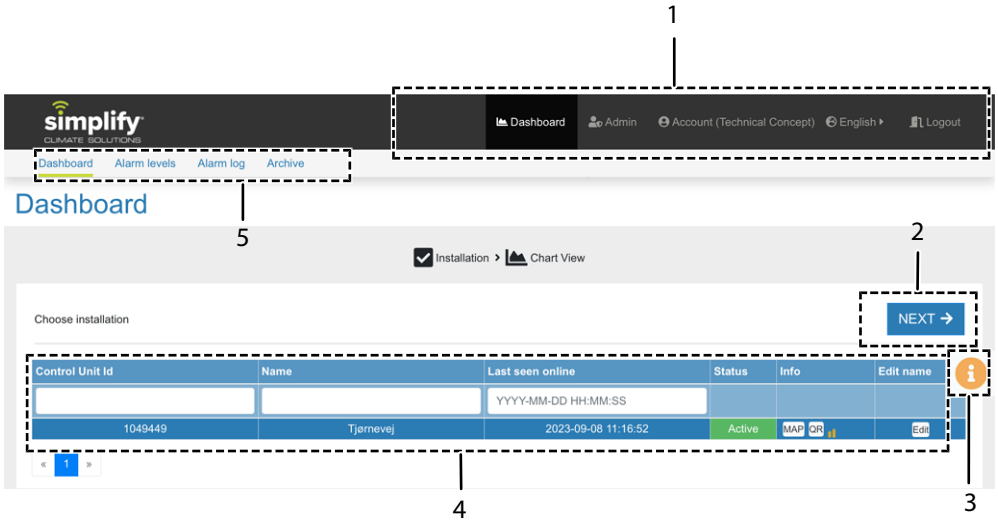

Fig. 15: Installation view

Item	Description
1	Main menu
2	Opens the "Chart View" menu of the selected Simplify Control Unit.
3	Quick info
4	List of installations (ongoing projects) or of available Simplify systems linked to the user.
5	Submenu

Main menu

- "Dashboard": Opens the start screen.
- "Admin": Opens a menu for the accounts management. Users with administrative rights can create and delete accounts or change the rights of the accounts, see chapter on further menus. This menu item is not visible to non-administrative users.
- "Account": Opens a menu with your account details. Here you can change your name and password.
- Language: Changes the language of the user interface.
- "Logout": Logs you out to close the session.

Quick info

Summarises the options of the current view for you and provides assistance.

List of installations

In this view, ongoing installations/projects are shown that are linked to the user. You can specify your search in the corresponding search field by setting a search filter for the ID, name or date. "449" in the search field of the ID finds any Simplify Control Unit ID containing "449".

1. Select a project and click on "NEXT" or double-click on the project to open the project in the chart view.

Each line of a project shows the status of the Simplify Control Unit on the right.

Status	Meaning
„Active“ / „Passive“	Indicates whether the Simplify Control Unit is active or passive.
[Signal Bar]	Shows the GSM signal strength by three bars, three green bars indicating the best signal strength.
	Displays an Ethernet symbol if the Simplify Control Unit is connected via Ethernet/LAN.
	Displays a warning symbol if the Simplify Control Unit is only supplied via the backup battery.

Various options can be activated via buttons:

Button	Meaning
"MAP"	Opens a Google map with the saved location of the Simplify Control Unit. The location is saved when programming via the Simplify App. You can manually change the saved location here by moving the location marker and clicking on "Update Position".
"QR"	Shows the QR code of the Simplify Control Unit. In this way, you do not have to be on the spot to scan the QR code, for instance if you wish to add a new Simplify Sensor Box.
"Edit"	Edits the name of the Simplify Control Unit.

Submenu

The submenu available in the "Dashboard" (installation view) main menu:

- "Dashboard": Opens the start screen.
- "Alarm levels": Opens a menu for setting up and managing alarm levels for the products.
- "Alarm log": Opens a menu for viewing the alarm history of your projects.
- "Archive": Opens a menu with a list of all archived projects. The functions are similar to those of the start screen, including the chart view.

The submenu available in the "Admin" main menu:

- "Users": Opens a menu for adding or deleting user accounts.
- "User Installations": Opens a menu for assigning the Simplify Control Unit to a user account. Each account can only view units assigned to itself.
- "Support": Opens a menu for assigning normal users to supervisor users. A supervisor user can view and manage projects of normal users.

en

Chart view

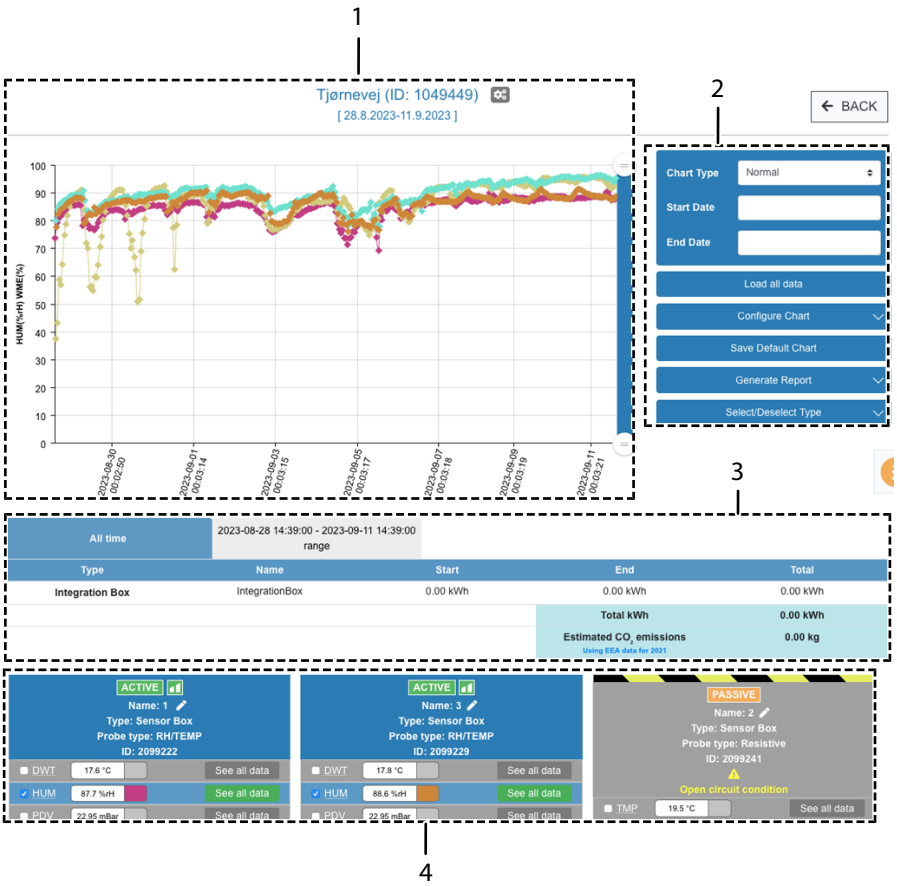

Fig. 16: Overview of the chart view

Item	Description
1	Chart Above the chart, the name, ID and date interval of the Simplify Control Unit are shown. The chart indicates the measuring process of the individual products. It shows measured values of each Simplify Sensor Box by default. The standard view can be changed.
2	Chart settings
3	In this field the power consumption of each Simplify Relay Box and Simplify Integration Box is shown, including an estimation on the associated CO_2 production. Depending on the location of the installation, the current information from the EEA (European Environment Agency) is used for estimation. You can switch between the view of the whole project interval and the interval set above.
4	Product overview, see chapter on product display

Abbreviations

Abbreviation	Description
BATT	Battery voltage sensor box [V]
eCO2	CO2 equivalent concentration [ppm]
DWT	Dew point [°C]
GPK	Grams per kilogram [g/kg]
SET	Relative humidity setpoint [%] of the Dantherm CDT MKII and MKIII condensing dehumidifier (display only with Simplify Integration Box)
HUM	Relative humidity [%]
IAQ	Index of the indoor air quality
MC	Moisture content level [%]
OHM	Electrical resistance [MΩ]
PDV	Saturated vapour pressure [mbar]
PWR	Output [kW]
kWh	Energy in kilowatt hours [kWh]
TMP	Temperature [°C]
TVOC	Overall amount of the emission concentration of volatile organic compounds [µg/m^3]
WCT	Absolute humidity [g/m^3]
WME	Wood moisture equivalent [%]

Chart

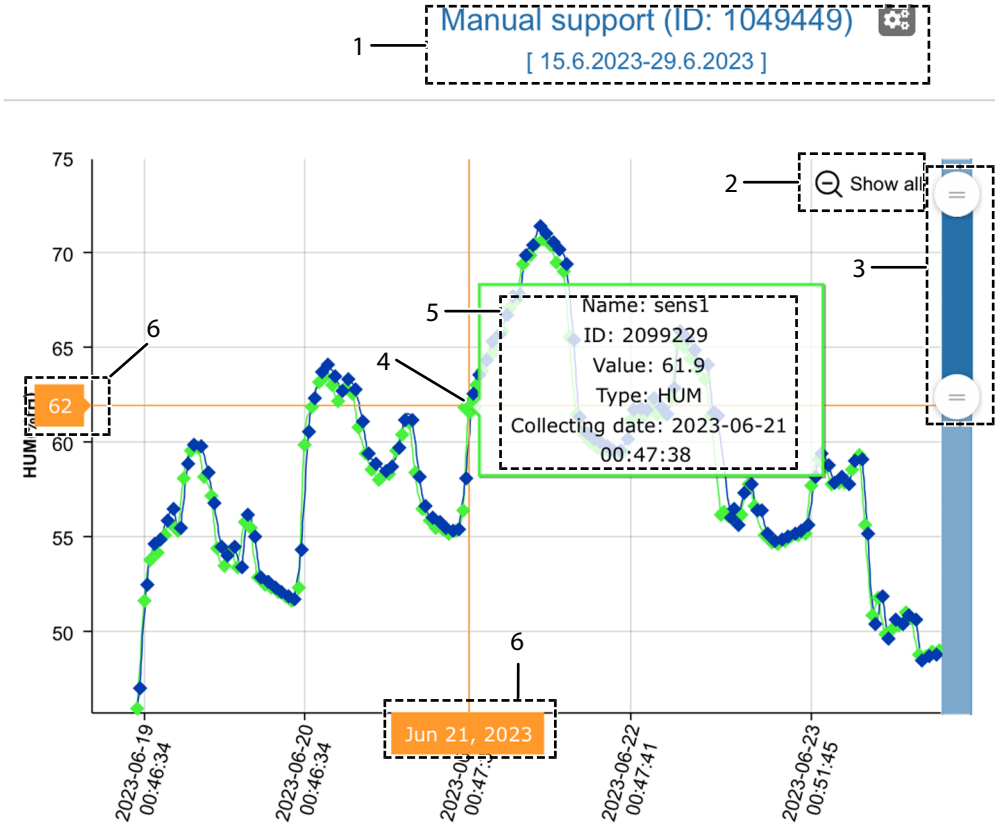

Fig. 17: Chart overview

Item	Description
1	Name, ID and date interval of the system.
	Setting icon: Allows you to set a higher data sampling rate. Faster data sampling will involve additional costs. The data sampling rate determines the number of measurement data per time interval. The battery life of a Simplify Sensor Box depends on the data sampling rate and local conditions (e.g. temperature, interference with radio signal). If data are transmitted on an hourly basis, the battery will at least last for 5 years.
2	Resetting the zoom level (back to the standard view)
3	White sliders to alter the value set (Y-axis). Move the white sliders up or down. When you position the mouse between the sliders, you can drag the whole interval.
4	Mouse pointer position and highlighted measured value. Details for a measuring point can be displayed by moving the mouse over the chart.
5	Details on the highlighted measured value
6	Time interval (X-axis) and value set (Y-axis) of the mouse pointer position. If you wish to view a specific interval (X-axis) in a more detailed fashion, click and hold the mouse on the desired starting point of the interval. Drag the mouse as far as desired.

Chart settings

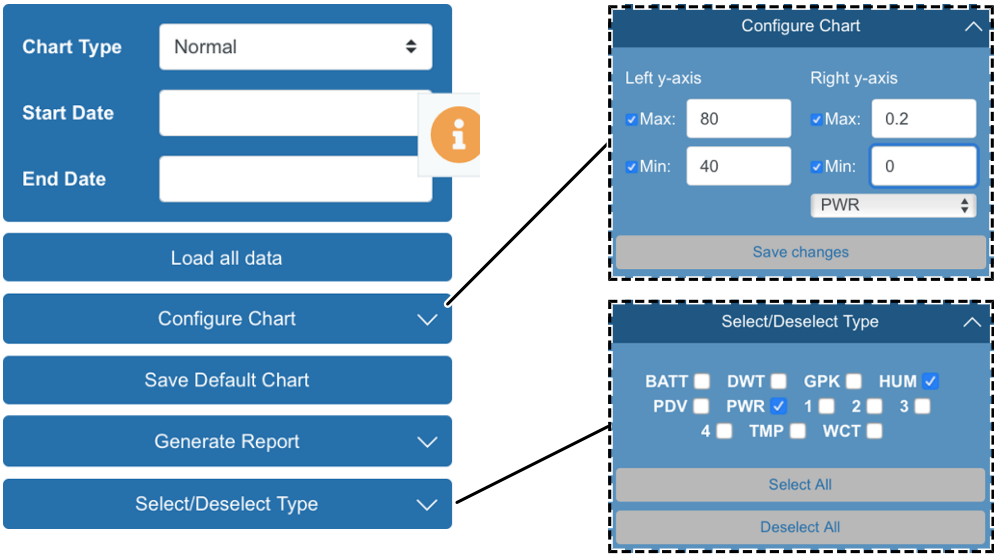

Fig. 18: Chart settings

Button	Description
"Chart Type"	Switches the display between normal measured values and daily to monthly average values.
"Start Date"	Changes the starting point of the time interval shown (X-axis).
"End Date"	Changes the end point of the time interval shown (X-axis).
"Load all data"/ "Load 2 week data"	Switches between the indication of all data and the indication of the past 2 weeks.
"Configure Chart"	Opens settings for the maximum and minimum of the value set shown (Y-axis). If you activate the display of several value types, you have the option of showing different scales on the right- and left-hand side.
"Save Default Chart"	Saves the currently shown value types as default settings. If you log in again with the same user details, your personal setting will be automatically applied.
"Generate Report"	Exports the currently displayed data of the selected products in the editable Excel and Word format.
"Select/Deselect Type"	Opens a list of value types. You can set checkmarks or uncheck to show or hide the desired value types for all products at the same time.

If you wish to adjust the scale of the value set (Y-axis) differently for the left- and right-hand side:

✓ The display of at least two types of value is switched on.

1. Click on "Configure Chart".
2. Activate the checkmark next to an input field and alter the number. Proceed in this way to adjust the left-hand and right-hand value set (Y-axis).
3. Select the types of value of the right-hand scale below the input fields.
4. Confirm changes with "Save changes".

en

Product display of the chart view

General information

The function of the product displays in the menu "Chart View" is described here. The top section of a product display contains the status, name, type and ID. The bottom section contains control elements for changing the measured values displayed. Some products have control elements and a time programme for switch-on/switch-off.

Icon	Description
	Pencil icon: Allows you to change the name.
	Save icon: Saves the changes.
X	Discards the changes.
	Technical alarm icon: There is a technical issue with the product. A text error description appears under the symbol (see page 36).
	Product note symbol: Displayed when moving the mouse over the symbol. Example: Value type "MC" (level of material moisture) is abnormally dry. Check position and setting of the Simplify Sensor Probe.
ACTIVE	The product is active and transmits data.
PASSIVE	The product is passive and does not transmit any data.
Bars	Radio signal strength between Simplify Control Unit and product: 2 green bars indicate the best signal strength.
ON	Product or socket outlet is switched on.
OFF	Product or socket outlet is switched off.
	Display of the index of the indoor air quality ("IAQ"). The rightmost colour visible indicates the current measured value (see table below).

Colour	IAQ index	TVOC [mg/m³]	Air quality	Comment
green	< 2	< 0.3	very good	ideal value
light green	2 – 3	0.3 – 1.0	good	Only if the limit value is not exceeded.
yellow	3 – 4	1.0 – 3.0	medium	Ventilation is required. If possible, identify the source. A stay of more than one year is not recommended.
orange	4 – 5	3.0 – 10.0	poor	Identify the source and increase the ventilation. A stay of more than one month is not recommended.
red	≥ 5	> 10.0	bad	The conditions are unacceptable. A stay is not recommended and should be as short as possible.

Tab. 1: Display of the index of the indoor air quality

Product display of the Simplify Sensor Box

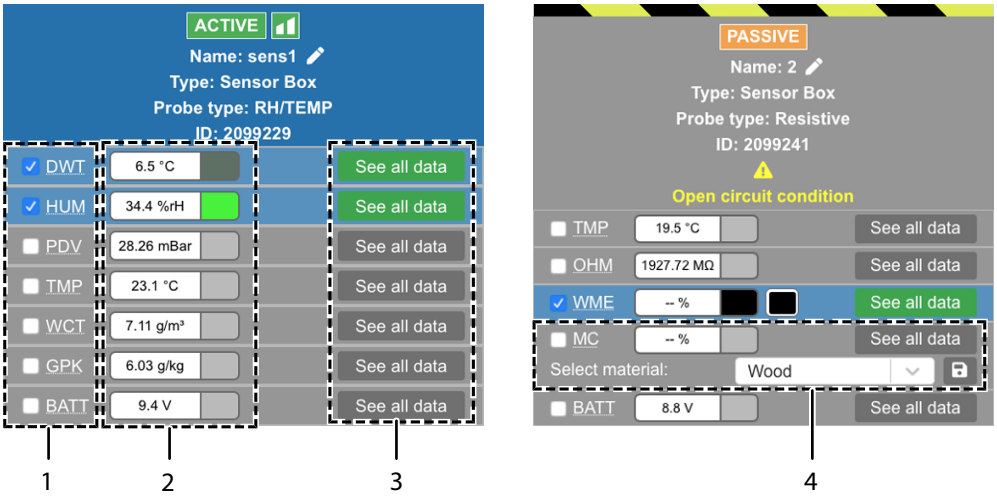

Fig. 19: Product display of the Simplify Sensor Box with Simplify Sensor Probe variants

The control elements can be divided into 3 columns:

- Left: Value types (1)
  - Shows a list of displayable value types. The available value types depend on the Simplify Sensor Probe.
  - You can move the mouse over an abbreviation to view the written out value type. The value types are described in the chapter on the "Chart View" menu.
  - You can set or delete checkmarks next to the value types to show or hide them in the chart.
- Centre: Measured values (2)
  - Shows measured values transmitted most recently.
  - Shows the colour of the value type in the chart if the checkmark is activated. Unique colours are automatically allocated.
  - You can click on the colour to change it. The change is permanently saved for the user.
- Right: "See all data" (3)
  - Shows a dialogue with a list of the measured values for the value type. The most recent measured values are displayed first.
  - At the bottom in the dialogue you can set the start and end date, in order to display specific days.
  - Start date: First day the measured values of which are to be displayed.
  - End date: First day the measured values of which are not to be displayed.
  - For example, if you wish to view the 05/01/23, set 06/01/23 as the end date (one day later).

Value type "MC" (4) (moisture content) allows you to select the material the moisture content of which is measured. The following are provided for selection:

- Wood
- Plaster
- Brick
- Cement mortar
- Screed layer
- Concrete

Product display of the Simplify Integration Box

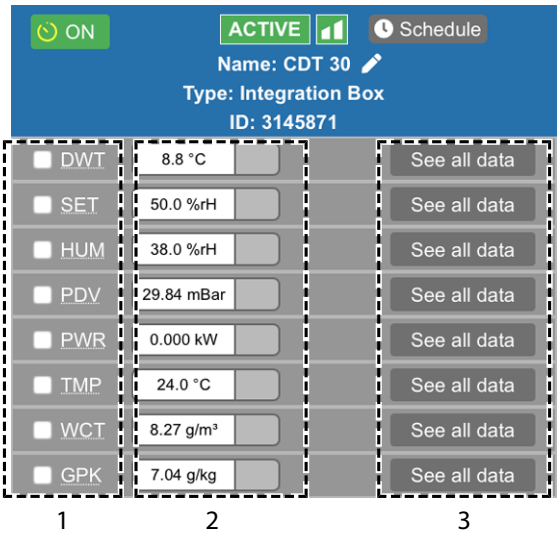

Fig. 20: Product display of the Simplify Integration Box

You can switch the Simplify Integration Box (and thereby the CDT MKII/MKIII) on or off by clicking on the green button ("OFF"/"ON") and confirming it in the new dialogue. The change is applied to the next data transmission process (usually within 10 minutes).

You can also create a schedule for switch-on or switch-off by clicking on the "Schedule" button. For further details, see the description of the schedule below.

The remaining control elements can be divided into 3 columns:

- Left: Value types (1)
- Centre: Measured values (2)
- Right: "See all data" (3)

For further details, see the description of the Simplify Sensor Box.

Product display of the Simplify Relay Box

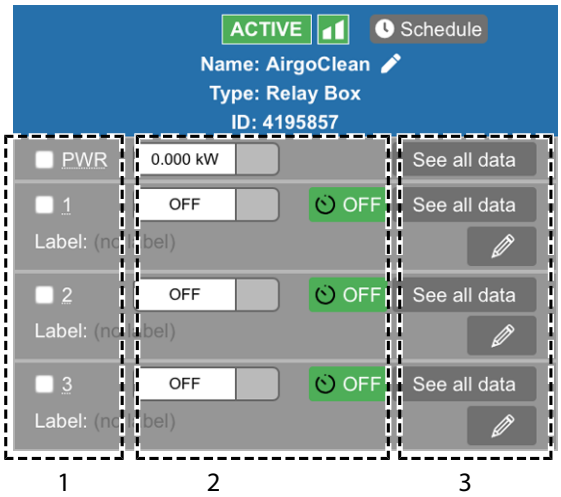

Fig. 21: Product display of the Simplify Relay Box

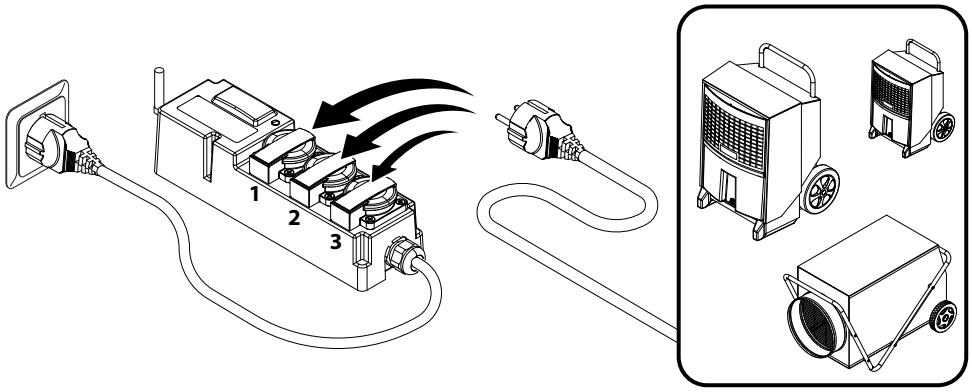

Fig. 22: Numbering of the socket outlets of the Simplify Relay Box

The control elements can be roughly divided into 3 columns:

- Left: Value types (1)
  - Shows value types for total power consumption and the status of each socket outlet. The numbering corresponds to the graphic above.
  - You can set or delete checkmarks next to the value types to show or hide them in the chart.
  - Shows the designation of the socket outlet if one has been assigned.
- Centre: Measured values (2)
  - Shows measured values transmitted most recently. For each socket outlet it is only measured whether it is "ON"=1 or "OFF"=2 in the Simplify Dashboard.
  - Colours can be shown and saved as for the Simplify Sensor Box.
  - You can switch each socket outlet on or off by clicking on the green button ("OFF"/"ON") and confirming it in the new dialogue. The change is applied to the next data transmission process (usually within 10 minutes). You can also create a schedule for switch-on or switch-off by clicking on the "Schedule" button. For further details, see the description of the schedule below.
- Right: "See all data" and edit designation (3)
  - "See all data" works as described for the Simplify Sensor Box.
  - You can use the pencil icon to change the designation of the socket outlet.

en

Setting a schedule

You can set a schedule for the following products:

- Simplify Relay Box (products plugged into the sockets)
- Simplify CC 4 Box (products plugged into the sockets)
- Simplify Integration Box

The schedule specifies when the products or sockets are to be **switched off**.

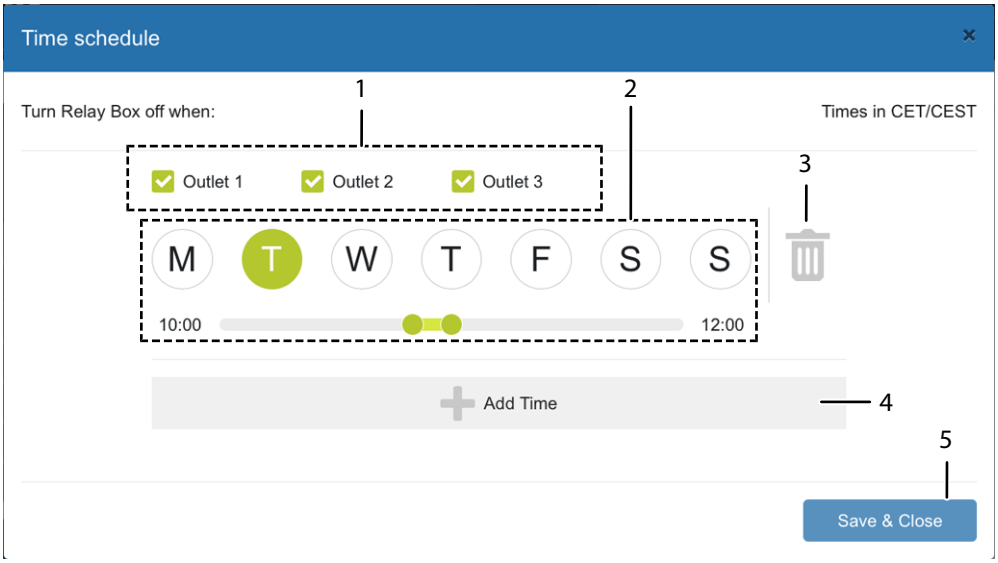

Fig. 23: "Schedule" dialogue

Item	Description
1	Sets which socket outlets the programming applies to. Simplify Integration Box does not indicate any sockets.
2	Schedule programming.
3	Removes the programming to the left of the icon.
4	Adds another programming.
5	Save changes and close dialogue.

Schedule programming includes the following options:

- Weekday: You can mark the days of the week on which the programming is to apply. Programming applies on the weekdays marked in green.
- Time period: You can programme the time using the slider. You can move the slider past 24:00 to select a time on the following day.
  - green: switched off
  - grey: switched on

Alarms

"Alarm levels" menu

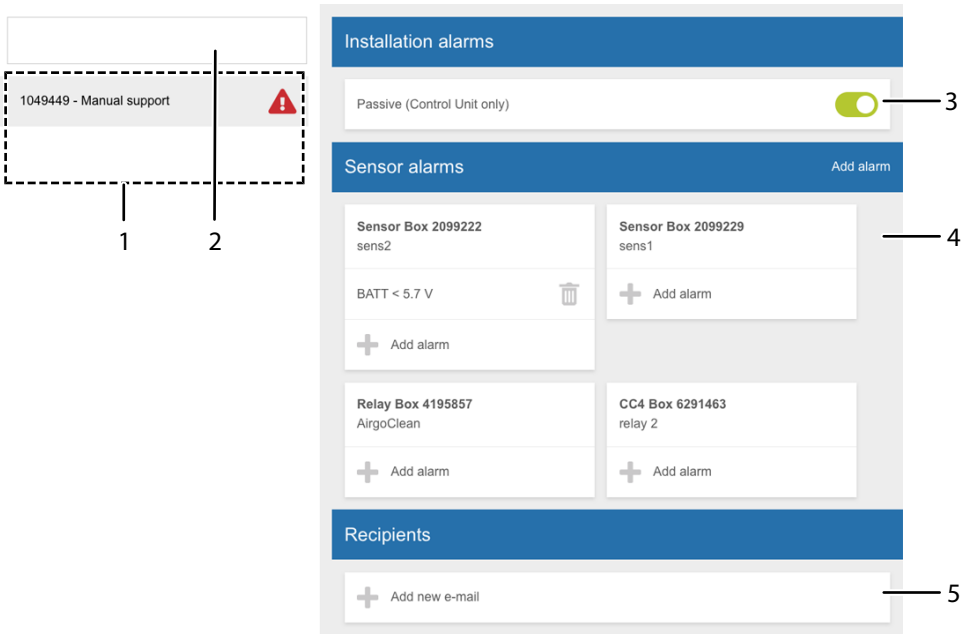

Fig. 24: "Alarm levels" menu overview

Item	Description
1	List of available projects A warning symbol is displayed next to the name if, for example, no recipient is entered for the alarm message. You can move the mouse pointer over the warning symbol to find out the exact reason.
2	Search screen for filtering the project list
3	Alarm for the passive status of the Simplify Control Unit selected. You can switch the alarm on/off.
4	List of connected products and their alarms
5	List of recipients for alarm messages
"+"	Add alarm or recipient
Waste bin icon	Delete alarm or recipient
Pencil icon	Change recipient

Here you can set alarms for different products in your ongoing projects. You can filter the search screen by ID or by the name of a specific Simplify Control Unit. Clicking on a Simplify Control Unit displays a list of alarms for the connected products on the right.

When the conditions of an alarm are met, the recipients entered will receive an e-mail. A triggered alarm sends a maximum of one e-mail every 8 hours, even if the alarm is pending the whole day. Proceed as follows to add a recipient:

1. Press "+" in the list of recipients.
2. Enter a valid email address.
3. Confirm with the Save icon.

Depending on the product, only specific alarm types can be set. You can set an alarm so that it serves as a warning or to indicate a completed process. The alarm type "PWR" for the Simplify Relay Box can for instance be used to identify whether a unit is switched off or on. The alarm type "Passive" is triggered as soon as the product receives the passive status, e.g. because it has been unplugged. Proceed as follows to add an alarm:

1. Press "+" underneath the desired product or Add alarm in the product list header.
   - ⇨ "+": Preselection of the product in the new dialogue
   - ⇨ "Add alarm": No preselection in the new dialogue

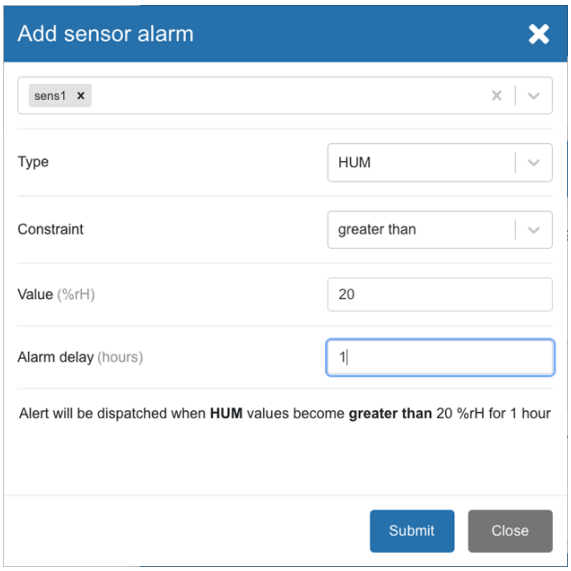

Fig. 25: Dialogue for adding an alarm

2. Add 1 or more products in the search screen above if required. You can also set alarms for several products at the same time. At least one product must be selected.
3. Select an alarm type that is permitted for the products selected. A red warning symbol indicates that the type selected is not permitted.
4. Set the trigger for the alarm, if possible. Available settings depend on the alarm type. The "Passive" alarm type, for example, is triggered when the product is in the passive status for too long.
   - ⇨ "Constraint": The condition that the limit value drops below the lower limit ("less than") or is exceeded ("greater than").
   - ⇨ "Value": Limit value
   - ⇨ "Alarm delay": Duration for which the condition has to be met before the alarm is triggered.
5. Confirm with "Submit". Confirming is not possible until all required fields have been filled in.

"Alarm log" menu

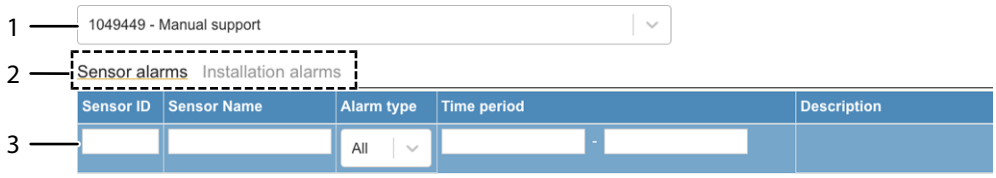

Fig. 26: "Alarm log" menu overview

In the "Alarm log" menu, you can view and filter the alarm history of your projects.

1. (1) Select a project in the search screen.
2. (2) Select the filter variant from the options provided in the search screen.
3. (3) Use the filters to narrow down your search by different details: ID, name, alarm type or period.

Management

"Admin" menu

In the "Admin" menu, you can manage the users. Simplify Climate Solutions offers you three types of users with different user rights in each case:

- "Company User": An administrative user that can create and delete users with different roles. This user type assigns each project (each Simplify Control Unit) to a user and assigns normal users to a supervisor.

INFO

The user name and password for a company user are exclusively allocated by Dantherm A/S.

- "Supervisor": User of a supervisor who can manage, add and delete users assigned to them. They can assign their projects to the users assigned to them as well as view projects of users assigned to them.
- "User": A normal user that can only view projects assigned to them. Every normal user can be exactly assigned to one supervisor.

"Users" menu item

Provides an overview of all users and their roles.

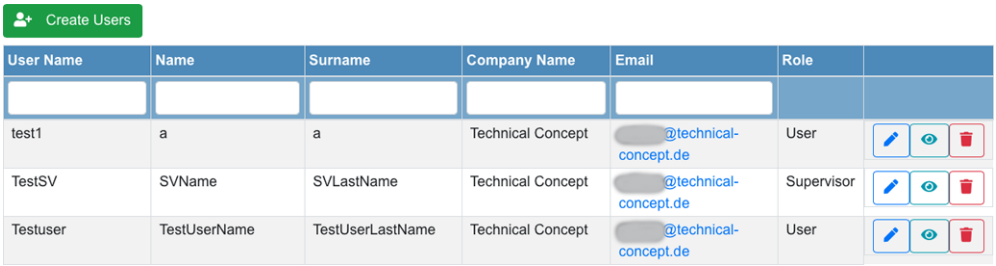

Fig. 27: "Users" menu item

- Use the filters to narrow down your search by different details: User name, surname, first name, company, email.
- On the right-hand side you can edit the user and view or delete details by clicking on the corresponding button.
- Via "Create Users" you can create new users and assign a role to them.

en

"User Installations" menu item

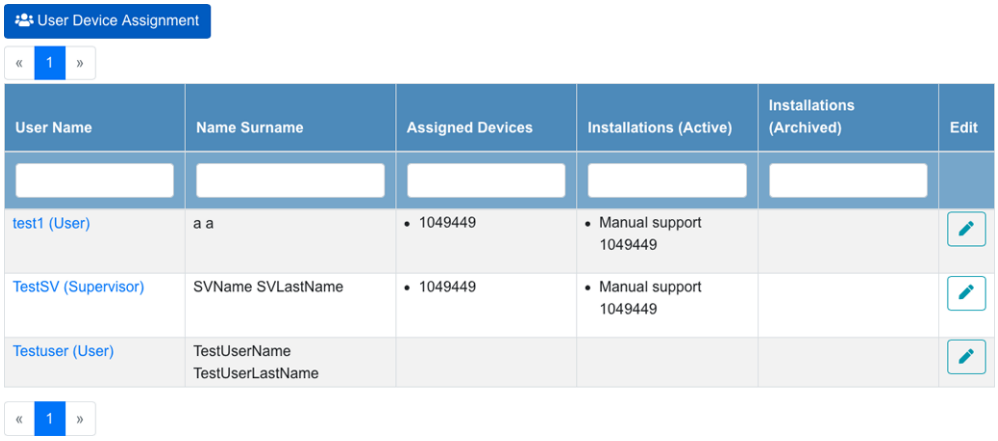

Fig. 28: "User Installations" menu item

Provides an overview of the users and each Simplify Control Unit assigned to them.

- Use the filters to narrow down your search by different details: User name, surname, first name, Simplify Control Unit assigned.
- By clicking on the user name, you can view further details on the user.
- By means of the pencil icon on the far right you can manage the projects assigned to the user. You have the following options:
  - In the search screen you add or delete a Simplify Control Unit.
  - Use the "Update" button to save the changes.
  - By means of the button above the search screen you navigate back.

"Support" menu item

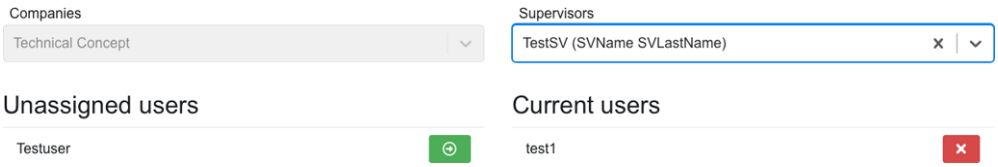

Fig. 29: "Support" menu item

Shows a list of normal users that are not assigned to any supervisor.

1. At the top right you can select a "Supervisor". Then a list of the users assigned to them is displayed.
2. You can click on the green arrow next to a user to assign the user.
3. You can click on the red "X" to cancel the assignment of the user.

INFO

For further information regarding the different user levels, please contact Dantherm A/S.

Troubleshooting

Displays in Dashboard

Alarm indicator	Cause	Corrective measures
"Full Water bucket"	The water tank of the CDT MKII or MKIII condensing dehumidifier is full.	Empty the water tank.
"Technical Alarm"	The red LED of the CDT MKII or MKIII condensation dehumidifier lights up.	Disconnect the condensing dehumidifier from the mains and check the possible reasons given in the technical documentation of the unit.
"Probe error"	The Simplify Sensor Probe is defective or not connected properly.	Connect the Simplify Sensor Probe to the Simplify Sensor Box again.
		Replace the Simplify Sensor Probe.
"Acclimatising"	The Simplify Sensor Probe – IAQ acclimatises to the environment.	No action is required. The acclimatisation process is part of normal operation (e.g. for calibration). No measured values are recorded during the acclimatisation process. The remaining duration is displayed via a product note.
"Resistance out of range"	The Simplify Sensor Probe – Resistive is outside the measuring range.	During normal operation, it may occur that the values are outside the measuring range. However, you should check the installation.
		Ensure that the Simplify Sensor Probe is well positioned and not exposed to unwanted environmental influences.
"Open circuit condition"	There is a short circuit between the measuring tips at the Simplify Sensor Probe – Resistive.	Check the Simplify Sensor Probe on site.
"Abnormally dry"	The Simplify Sensor Probe – Resistive is unusually dry. The moisture content level cannot be determined.	Ensure that the setting of the material under value type "MC" of the product display is correct.

en

Troubleshooting

Problem	Cause	Corrective measures
The Simplify Control Unit has no connection to the GSM network. The LED is flashing orange.	Poor or no GSM signal	Position the Simplify Control Unit in a place with a stronger GSM signal or connect the Simplify Control Unit to an Ethernet or LAN connection.
The Simplify Control Unit does not flash green after starting.	The Simplify Control Unit has not received any data from the Simplify Cloud yet.	Wait for some minutes.
	No network connection.	Switch between Ethernet and GSM connection.
	No products have been programmed on the Simplify Control Unit.	Use the Simplify App to add products. Record the change.
The Simplify Control Unit is not illuminated green permanently.	Data has not been received from every product yet.	Check the status in the Simplify Dashboard.
		Re-insert the Simplify Sensor Probe of each inactive Simplify Sensor Box.
The Simplify Control Unit is illuminated red	No power supply, backup battery active.	Ensure that the unit is connected to the power supply.
The Simplify Control Unit flashes red	The backup battery does not work.	Send the unit to Dantherm A/S for replacement of the backup battery.
The Simplify Relay Box does not measure the energy consumption at all or is measuring it incorrectly.	Poor or no signal between the Simplify Relay Box and the Simplify Control Unit.	Reposition the products. Make sure that no obstacles (e.g. walls, objects) can interfere with the signal.
		Wait until 3 signal sounds confirm the connection.
		Check the connection in the Simplify Dashboard.
The Simplify Relay Box is illuminated red.	The Simplify Relay Box is overloaded.	Remove at least one unit from the Simplify Relay Box. Use at least one further Simplify Relay Boxfor the units removed.
The Simplify Sensor Box is not working properly or is shown as passive in the Simplify Dashboard. The Simplify Sensor Box transmits data that are obviously incorrect to the Simplify Dashboard.	The Simplify Sensor Probe is defective or not connected properly.	Connect the Simplify Sensor Probe to the Simplify Sensor Box again.
	The Simplify Sensor Box is not connected to the Simplify Control Unit.	If there is only one signal sound, the Simplify Sensor Probeis defective. Replace it.
		If only two beeps sound, reposition the product if necessary.
		If the data transmitted remain to be incorrect, replace the Simplify Sensor Probe.
When connecting the Simplify Sensor Probe to the Simplify Sensor Box, there is no signal.	The battery is empty or defective.	Change the battery of the Simplify Sensor Box.

Problem	Cause	Corrective measures
The Dantherm CDT MKII or MKIII condensing dehumidifier does not start or does not continue running.	The operating distance between the Simplify Control Unit and the Simplify Integration Box in the condensing dehumidifier has been exceeded.	Check the signal between the products in the Simplify Dashboard. Reposition the products if necessary.
The Simplify App is not working.	The Simplify App has to be updated.	Go to Google Play or the App Store to check whether an update is available and execute the update.
	The smartphone/tablet is using an older version than Android 5.1 / iOS 5.	Update the Android /iOS version on your smartphone/tablet to version 5.1 / iOS 10 or higher.
	Available memory space not sufficient.	Check whether the smartphone/tablet is provided with sufficient internal memory space.
	No GSM network available.	Check whether the GSM reception for your smartphone/tablet is sufficient.
	The necessary permissions have not been issued.	Permit the Simplify App to access your camera and your location. Install the Simplify app again, if necessary, to make a new access query.
The schedules for Simplify Relay Box or Simplify Integration Box do not work.	The necessary permission has not been issued.	Permit the Simplify App to access your location. Install the Simplify app again, if necessary, to make a new access query.

en

Complete the project

INFO

Batteries draining

The Simplify Sensor Box will continue to operate if the Simplify Sensor Probe is not unplugged.

When there is no power supply, the Simplify Control Unit will continue to operate via the buffer battery unless the project is archived via the Simplify App.

- Follow all the steps described below to avoid unnecessary draining of the batteries.

Archiving

When a project is completed, it must be archived using the Simplify App.

1. Scan the QR code of the Simplify Control Unit and press "ARCHIVE" in the Simplify app.

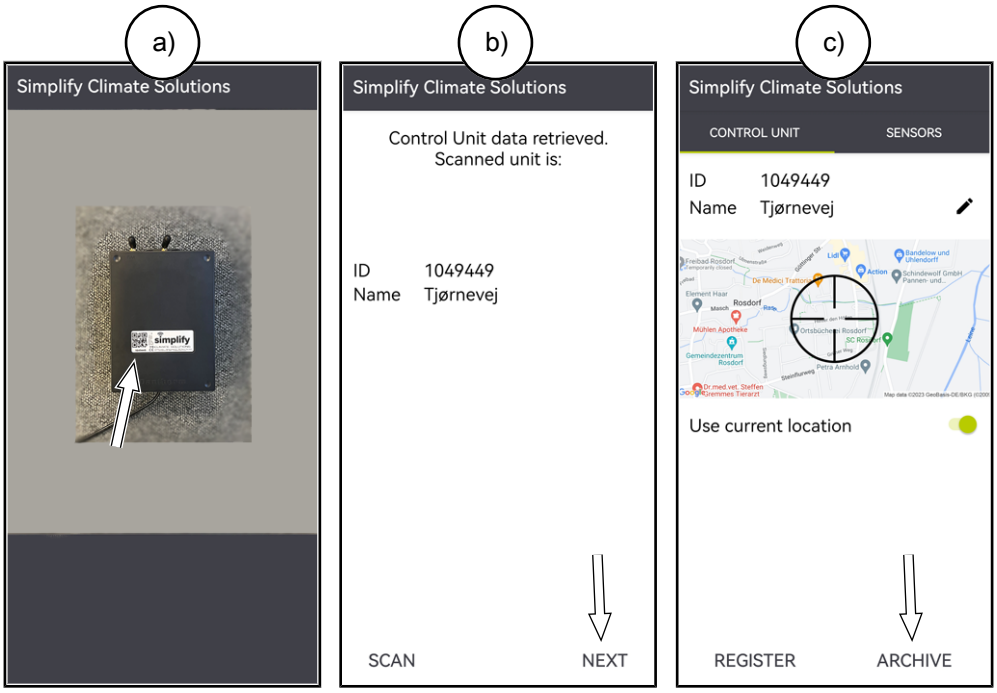

Fig. 30: Archiving a project

⇨ The Simplify Control Unit is switched off by the "Cloud" after a maximum of 10 minutes.

⇨ The successful archiving can be checked in the Simplify Dashboard under: https://simplifyclimatesolutions.com

If you do not archive a project, the next measurement series will continue under this project, which will make differentiation in the Simplify Dashboard difficult. All archived projects can be called separately in the "Archive" menu.

Collecting the products

1. Unplug the mains plugs of the Simplify Control Unit and the relay boxes from the socket outlet.
2. Unplug and collect all other products. Remove the Simplify Sensor Probe from each Simplify Sensor Box. To do so, pull back the handle part of the plug before unplugging it.

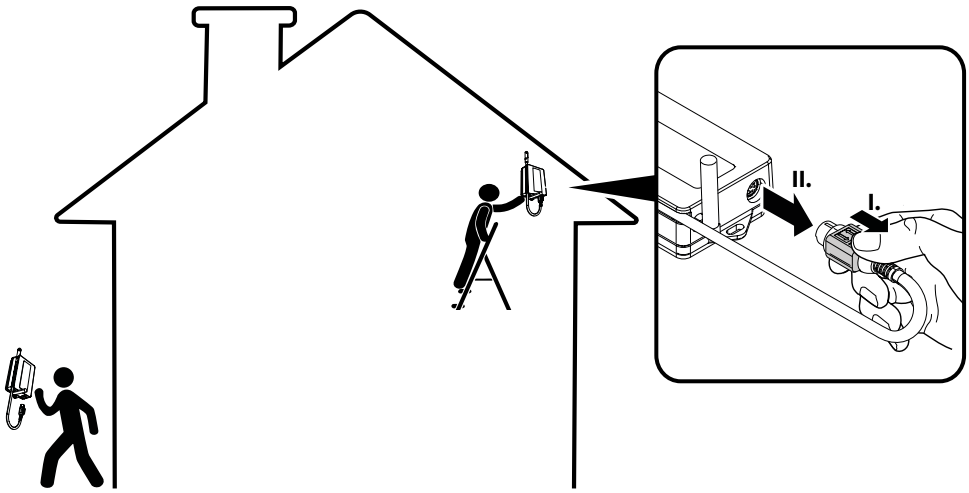

Fig. 31: Switching off the Simplify Sensor Box

3. Stow all the products in the case.

en

Disposal

General notes

Simplify Control Unit and Simplify Sensor Box contain batteries. The batteries must be removed before disposal.

Batteries and accumulators are not to be disposed of with regular household waste, but in the European Union – in compliance with Directive 2006/66/EC OF THE EUROPEAN PARLIAMENT AND OF THE COUNCIL of 06 September 2006 on batteries and accumulators – have to be supplied to professional disposal. Please dispose of batteries and accumulators in compliance with the applicable statutory provisions.

The symbol of the crossed-out waste bin on an old electrical or electronic appliance means that this appliance must not be disposed of in the household waste at the end of its service life. Collection points for old electrical or electronic appliances for free-of-charge return are provided to you locally. The addresses can be retrieved from your town or local administration. The separate collection of old electrical and electronic appliances is to enable the reuse, recycling and other forms of utilisation of old appliances and is to prevent negative impacts on the environment and human health when disposing of the hazardous substances potentially contained in the units.

Disassembly

⚠ DANGER

Risk of electric shock!

You can be severely injured by an electric shock.

- Disconnect the Simplify Control Unit from the mains by unplugging the mains plug from the socket outlet before you open the Simplify Control Unit!

The following video will show you how to remove the battery of the Simplify Sensor Box: https://www.youtube.com/watch?v=3drKseAWyKs

Annex

Technical data

Simplify Control Unit

Specifications	Unit	Value
Power supply	VAC	85-265
	Hz	50-60
Power consumption	W	2.7
Backup battery	VDC	3.7
GSM frequency	MHz	850/900/1800/1900
GPRS class		12
Maximum ISM transmission power (Tx)	mW	10
ISM frequency band (Tx/Rx)	MHz	868
Type of protection		IP 54
Storage temperature	°C	-40 – +60
Operating temperature	°C	-20 – +60
Ethernet		RJ45
RS485 Modbus		RJ45

Simplify Sensor Box

Specifications	Unit	Value
Battery voltage	VDC	9
Electricity consumption in sleep mode	µA	4.5
Amperage during data transmission (Tx)	mA	12
Maximum ISM transmission power (Tx)	mW	10
ISM frequency band (Tx/Rx)	MHz	868
Protection class		IP 54
Storage temperature	°C	-40 – +60
Operating temperature	°C	-20 – +60
Battery life at default data sampling rate with Simplify Sensor Probe - RH/TEMP connected	Years	+5

Simplify Relay Box

Specifications	Unit	Value
Power supply	VAC	184-264
	Hz	50
Maximum amperage	A	16
Maximum ISM transmission power (Tx)	mW	10
ISM frequency band (Tx/Rx)	MHz	868
Protection class		IP 54
Storage temperature	°C	-40 – +60
Operating temperature	°C	-20 – +60

en

Simplify CC 4 Box

Specifications	Unit	Value
Power supply	VAC	207-253
Maximum amperage	A	16 UK: 13 CH: 10
Maximum ISM transmission power (Tx)	mW	10
ISM frequency band (Tx/Rx)	MHz	868
Protection class		IP 54
Storage temperature	°C	-40 – +60
Operating temperature	°C	-20 – +60

Simplify Sensor Probe – RH/TEMP

Specifications	Unit	Value
Voltage	VDC	3.3
Amperage	mA	1.5
Power	mW	5
Relative humidity measuring range	% RH	0-100
Relative humidity tolerance	% RH	+/– 2
Relative humidity resolution	% RH	0.1
Temperature measuring range	°C	-40 – +100
Temperature tolerance	°C	+/– 0.2
Temperature resolution	°C	0.1
Protection class probe tip		IP 67

Simplify Sensor Probe – IAQ

Specifications	Unit	Value
Voltage	VDC	3.3
Amperage (active/idle)	mA	5.2/0.000450
Power	mW	0.16
TVOC measuring range	µg/m^3	0-20,000
TVOC tolerance	µg/m^3	1
TVOC resolution	µg/m^3	1
eCO2 measuring range	ppm	400-5000
eCO2 tolerance	ppm	+/– 25%
eCO2 resolution	ppm	1
Index measuring range	IAQ	0 – +5
Index tolerance	IAQ	+/– 0.1
Index resolution	IAQ	0.1
Storage temperature	°C	-40 – +125
Operating temperature	°C	-50 – +125
Protection class probe tip		IP 67

Simplify Sensor Probe – Resistive

Specifications	Unit	Value
Voltage	VDC	3.3
Amperage	mA	10
Power	mW	33
Wood moisture equivalent measuring range	%	0 ... ≥30
Wood moisture equivalent tolerance	%	+/– 1
Wood moisture equivalent resolution	%	1
Temperature measuring range	°C	-40 – +100
Temperature tolerance at 0-50 °C	°C	+/– 1
Temperature resolution	°C	0.1
Protection class probe tip		IP 67

Simplify Integration Box

Specifications	Unit	Value
Voltage	VDC	9-18
Amperage during data transmission/reception (Tx/Rx)	mA	12/5
Maximum ISM transmission power (Tx)	mW	10
ISM frequency band (Tx/Rx)	MHz	868
Protection class		IP 54
Storage temperature	°C	-40 – +60
Operating temperature	°C	-20 – +60

IP protection classes

IP 54:
Dust-protected.: Small quantities of dust may penetrate the product, however, this will not affect the functionality.
Protected against splash water: The product is protected against splash water from all directions.

IP 67:
Dust-tight: Dust cannot penetrate the product.
Short-time immersion into water: The product can be immersed into water of a depth of 1 m for up to 30 minutes.

en

Dimensions

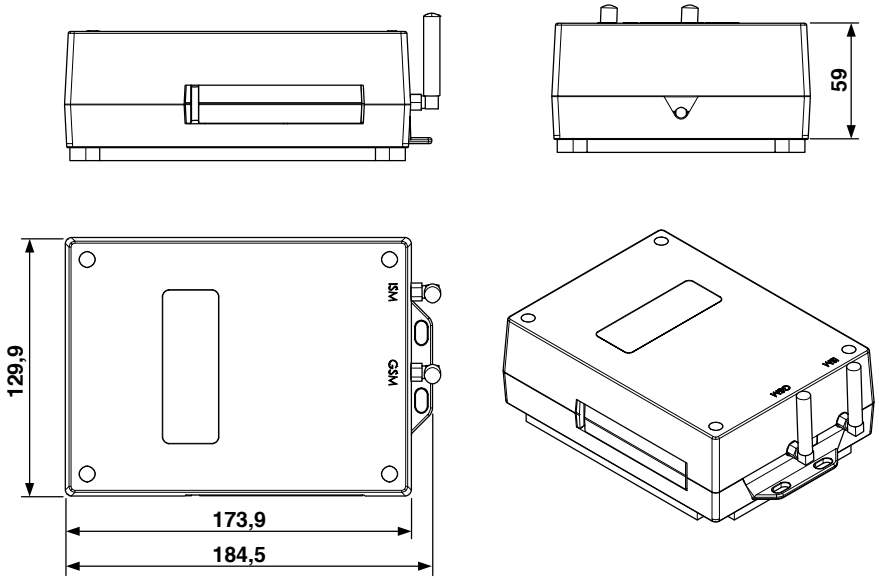

Fig. 32: Dimensions Simplify Control Unit (in mm)

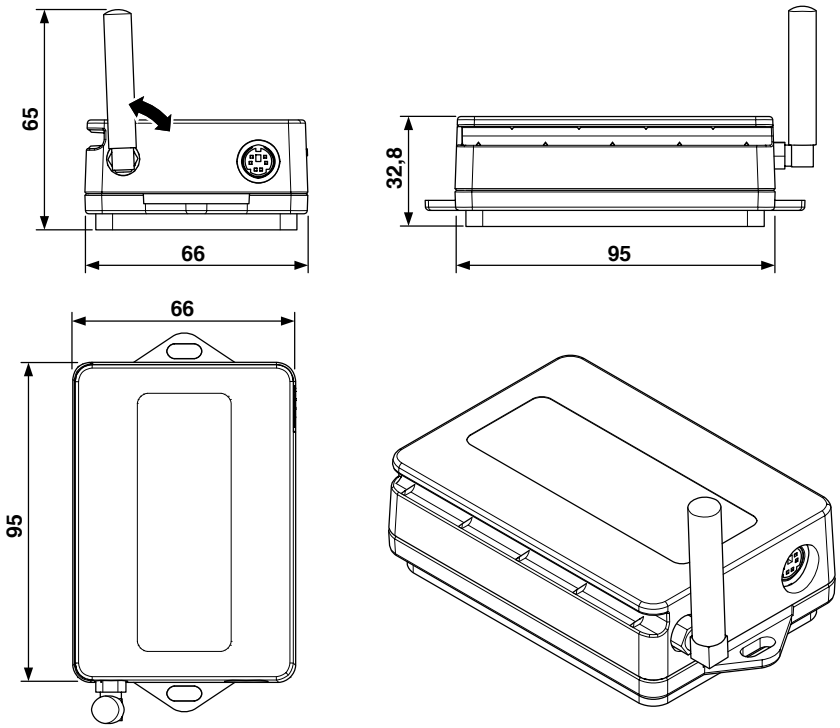

Fig. 33: Dimensions Simplify Sensor Box (in mm)

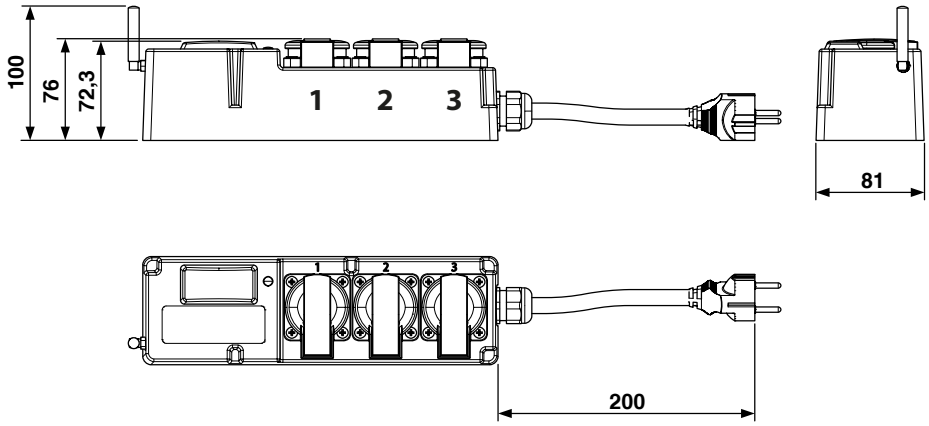

Fig. 34: Dimensions Simplify Relay Box (in mm)

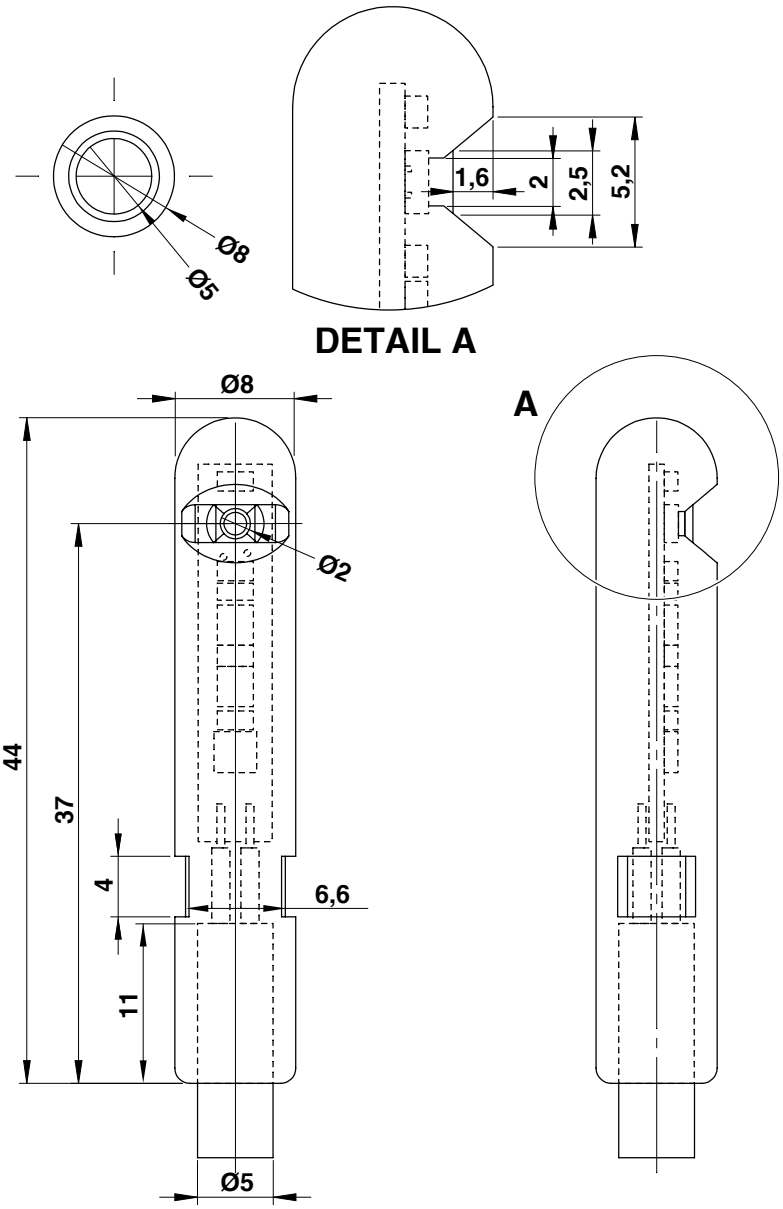

Fig. 35: Dimensions Simplify Sensor Probe - RH/TEMP/IAQ (in mm)

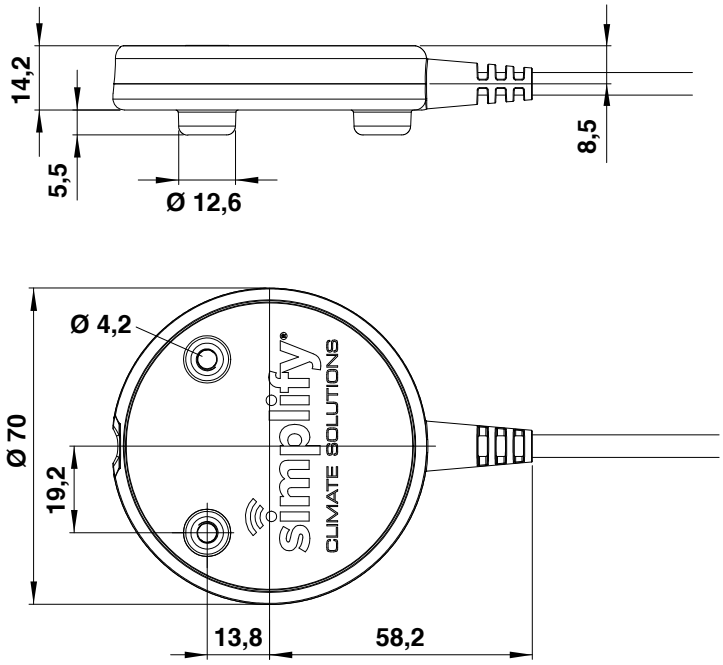

Fig. 36: Dimensions Simplify Sensor Probe - Resistive (in mm)

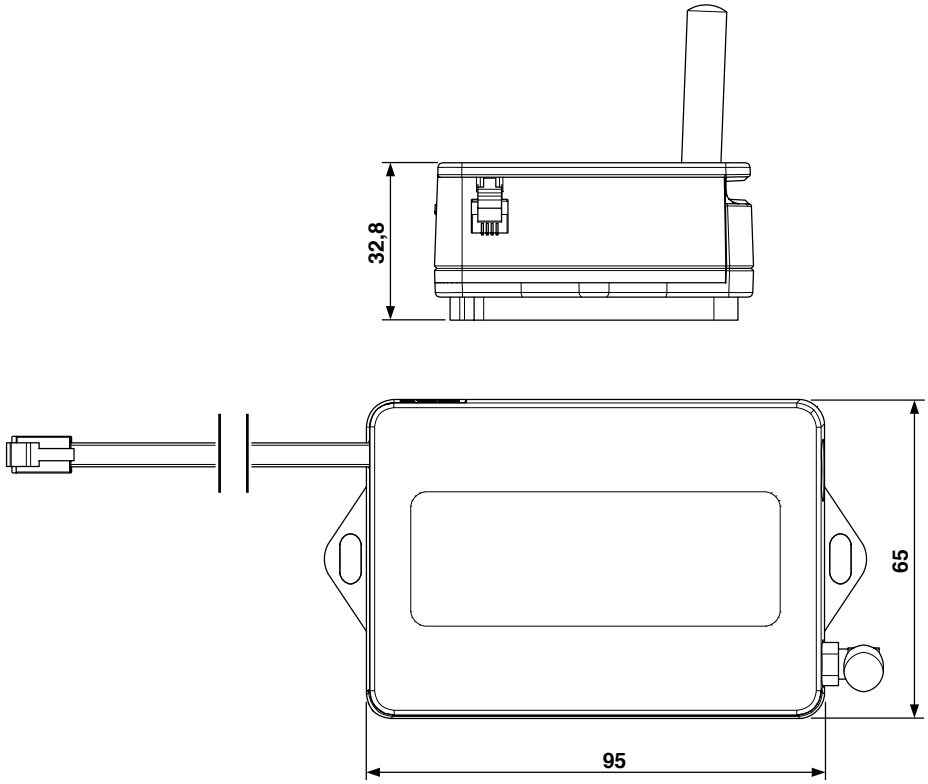

Fig. 37: Dimensions Simplify Integration Box (in mm)

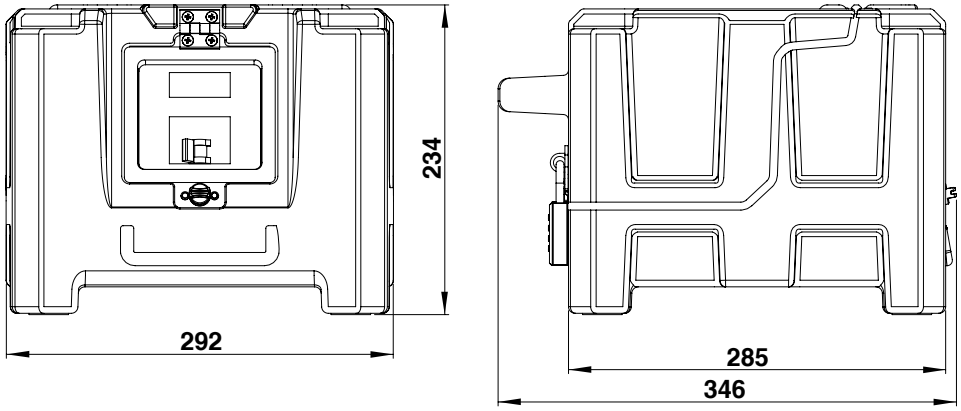

Fig. 38: Dimensions Simplify CC 4 Box (in mm)

en

Declaration of conformity (EU)

Dantherm A/S, Marienlystvej 65, DK - 7800 Skive hereby declares that the equipment listed below:
No.: 380000, 380010, 380003, 380005, 380011, 380006
Type Simplify Control Unit, Simplify Sensor Box, Simplify Relay Box, Simplify Integration Box

– comply with the provisions of the following guidelines:

2014/35/EU	Low Voltage Directive
2014/30/EU	EMC Directive
2014/53/EU	Radio Equipment Directive
2011/65/EU	RoHS Directive
1907/2006/EC	REACH Regulation

– and are manufactured in compliance with the following standards:

EN 62368-1:2020	Audio/video, information and communication technology equipment - Part 1: Safety requirements
EN 301 489-1 V2.1.1:2017	Electromagnetic compatibility (EMC) standard for radio equipment and services; Part 1
EN 301 489-3 V2.1.1:2019	Electromagnetic compatibility (EMC) standard for radio equipment and services; Part 3
EN 301 511 V12.5.1:2017	Global System for Mobile communications (GSM/LTE)
EN 300 220-2 V3.2.1:2018	Short Range Devices (SRD) operating in the frequency range 25 MHz to 1 000 MHz; Part 2
EN 300 220-1 V3.1.1:2017	Short Range Devices (SRD) operating in the frequency range 25 MHz to 1 000 MHz; Part 1

Skive, 03.01.2023

Product development
Henrik Sick Hansen

Jakob Bonde Jessen
Managing Director

Declaration of conformity (UKCA)

Dantherm, Marienlystvej 65, DK-7800 Skive, declares that the units mentioned below:
Item no.: 380000, 380010, 380003, 380005, 380011, 380006
Type: Simplify Control Unit, Simplify Sensor Box, Simplify Relay Box, Simplify Integration Box

– confirm with the following directives:

- Electrical Equipment (Safety) Regulations 2016
- Electromagnetic Compatibility Regulations 2016
- Radio Equipment Regulations 2017
- UK REACH Regulations
- The Restriction of the use of Certain Hazardous Substances in Electrical and Electronic Equipment Regulations 2012

– and is manufactured in compliance with the following harmonized standards:

EN 62368-1:2020	Audio/video, information, and communication technology equipment – Part 1: Safety requirements
EN 301 489-1 V2.1.1:2017	Electromagnetic compatibility (EMC) standard for radio equipment and services; Part 1
EN 301 489-3 V2.1.1:2019	Electromagnetic compatibility (EMC) standard for radio equipment and services; Part 3
EN 301 511 V12.5.1:2017	Global System for Mobile communications (GSM/LTE)
EN 300 220-2 V3.2.1:2018	Short Range Devices (SRD) operating in the frequency range 25 MHz to 1000 MHz; Part 2
EN 300 220-1 V3.1.1:2017	Short Range Devices (SRD) operating in the frequency range 25 MHz to 1000 MHz; Part 1

Skive, 03.01.2023

Product development
Henrik Sick Hansen

Managing Director
Jakob Bonde Jessen

simplify®
CLIMATE SOLUTIONS

https://support.dantherm.com

Dantherm Denmark A/S
Marienlystvej 65
7800 Skive
Denmark
danthermgroup.com

KEEP UPDATED
FOLLOW US ON:

DANTHERMGROUP